JDE | PROFESSIONAL

CAFITESSE QUANTUM TOUCH

User Manual

PN: 10043691_02

Date: 2023-11-24

Copyright

The information contained in this manual is the property of Jacobs Douwe Egberts. (hereinafter referred to as "JDE"). This manual was prepared for the internal use of the customers.

Without the prior written consent of JDE, no part of the document shall be used, duplicated, translated, or transmitted by any means or for any commercial purposes.

JDE has the right to change its technical data and equipment information without notice.

The logo of Jacobs Douwe Egberts is a registered trademark of JDE.

Copyright © Jacobs Douwe Egberts. All rights reserved.

Revision #	Date	Serial #	Description
1	Mar. 23, 2023.	None	Release for initial review.
2	Jul. 14, 2023.	None	Updates according technical review.
3	Nov. 24, 2023	None	Update after technical review.
4			

TABLE OF CONTENTS

1- BEFORE INITIAL START-UP 7

2- SAFETY INSTRUCTIONS 8
2.1 Safety Categories 8
2.2 Safety and Warning Symbols 8
2.2.1 Hazard symbols 9
2.2.2 Prohibition symbols 9
2.2.3 Mandatory action symbols 9
2.3 User Groups 10
2.4 Necessary Safety Instructions 10
2.5 General 12
2.6 Refrigeration system information 13
2.7 Replacement of Worn Parts 14
2.8 Disposing of the Packaging Material 14
2.9 Disposal of the machine 14
2.11 Servicing the dispenser 15
2.12 Cleaning the dispenser 15
2.13 Food safety instructions (HACCP) 16

3- TRANSPORTATION AND STORAGE 17

4- TECHNICAL SPECIFICATIONS 18
4.1 Specifications 18
4.2 Dimensions - Q100 19
4.3 Dimensions - Q200 20
4.4 Dimensions - Q300 21

5- PART OVERVIEW DESCRIPTION 22
5.1 Front view & back view 22
5.2 Interior view 23
5.3 Button functions 24
5.4 Display overview 24

6- INSTALLATION AND INITIAL START-UP 25
6.1 Unpack the Machine 25
6.2 Install the Machine 26
6.3 Dispenser start-up 27
6.4 Dispenser storage 28

7- INGREDIENT PACK HANDLING 29

8- DAILY OPERATION 30
8.1 Safety for Operation 30
8.2 Place cups and pots correctly 31
8.3 Drink delivery 32
8.4 Drink delivery with preselections 33
8.4.1 COLD-preselection (option) 33
8.4.2 VOLUME-preselection 33
8.4.3 STRENGTH-preselection 34
8.5 Inserting and removing product packs 35
8.6 Replacing an empty product pack 36
8.7 Switching on the dispenser 37
8.8 Switching off the dispenser 38
8.9 Locking/unlocking the dispenser 39

9- CLEANING 40
9.1 Safety for Cleaning 40
9.2 Cleaning procedures 41
9.3 Exterior cleaning 42
9.4 Flushing 43
9.5 Cleaning - Q100 & Q300 45
9.6 Cleaning - Q200 49

10- USER PROGRAMMING 53
10.1 Activating the operator mode 53
10.2 UI settings 54
10.3 Date / time 55
10.4 Language 55
10.5 Eco settings 56
10.6 Summer / winter time 57
10.7 Happy hour 57
10.8 Payment 58
10.9 Non-resettable counters 59
10.10 Cleaning schedule 60
10.11 Resettable counters 61
10.12 Water system 62
10.13 System Info 62
10.14 Contact info 63
10.15 Maintenance Pin 63
10.16 Global drink settings 64

11- DISPLAY MESSAGE AND TROUBLE SHOOTING 65

12- OPTIONS.....66
12.1 Software options 66

1- BEFORE INITIAL START-UP

This manual provides instructions and information about how to handle the machine safely, including basic operational requirements for CAFITESSE QUANTUM TOUCH.

All description in this manual agrees with the model and appearance of the Machine deliverables.

This manual is available to consumers, service personnel, the experts responsible for the maintenance and repair work and the operating company itself.

This manual must be available to every user throughout the entire life of the machine.

Read and understand this manual before the operation, maintenance, and repair of the Machine.

It is prohibited to duplicate and lend this manual without permission.

For the information not included in this manual, or unclear information related to operation, please contact JDE for technical support.

Keep this manual during the lifespan of the Machine.

JDE recommends to keep this manual near the Machine for easy reference. Do not remove any pages from this manual.

If the manual is lost, damaged, or unreadable, please download the manual from:

https://www.jacobsdouweegbertsprofessional.support/

To help with the access to this manual, the conventions in the manual are as below:

- Tasks and procedures are shown as step-by-step lists.
- Unordered lists are used for examples and tasks where the sequence of actions is not important.
- **Bold font** is usually used for warning texts, and headings of table rows and columns.
- *Italic font* is used for note texts, and figure and table captions.

2- SAFETY INSTRUCTIONS

2.1 Safety Categories

The danger, warning, caution and note statements are used in the document when it is necessary to take special precautions to prevent possible damage or injuries.

The warning statements are classified into the following four categories according to the severity of the hazard and the level of risk specified in the ISO 3864 standard.

	⚠ Danger
	DANGER represents the hazards with a high level of risk which. If not prevented, it will cause death or serious injury.
	⚠ Warning
	WARNING represents the hazards with a medium level of risk which. If not prevented, it could cause death or serious injury, or cause damage to the Machine.
	⚠ Caution
	CAUTION represents the hazards with a low level of risk which. If not prevented, it could cause minor or moderate injury, or cause damage to the Machine.
	NOTE provides important information and useful tips.

2.2 Safety and Warning Symbols

ISO 3864 standard specifies general shapes and colors of the danger, warning, and caution symbols.

	Hazard: It specifies the hazards.
	Prohibition: It specifies the operation that cannot be done.
	Mandatory action: It specifies the action that must be taken to prevent a hazardous situation.

2.2.1 Hazard symbols

These hazard symbols identify dangerous situations or operations, and give warnings on situations that can cause the damage and injury:

Hot surface hazards

Electrical hazards

Hand crushing hazards

High temperature surface hazards

2.2.2 Prohibition symbols

These prohibition symbols identify dangerous situations or operations, and give warnings on situations that can cause the damage and injury:

No smoking

Do not touch

Do not modify

No flames

Restricted access

2.2.3 Mandatory action symbols

These mandatory action symbols are used in warnings to identify a mandatory action.

Read the manuals or instructions

Disconnect main power plug

2.3 User Groups

User: Customer/consumer/direct operator. They use the Coffee Machine to brew drinks but can not have access to internal parts of the Coffee Machine or its programming without adequate training as provided by the manufacturer, operating company or distributor.

Service personnel: Personnels are trained by the manufacturer, operating company or distributor and know how to fill and clean the Coffee machine.

Service technician: Experts are familiar with the Coffee Machine and can be aware of the hazards posed by it. They are trained by the manufacturer, operating company or distributor, and capable of installing, maintaining and repairing the Coffee Machine.

Operating company: Responsible for setting up and operating the Coffee Machine correctly.

NOTE :
No one is permitted to carry out service, maintenance or repair work on the machine unless they have been properly instructed by the operating company or the manufacturer.

2.4 Necessary Safety Instructions

⚠ Danger

It is forbidden for personnel not approved to install, operate, repair, or deactivate the Coffee Machine without JDE's written consent.

It is forbidden for personnel not approved to access to the service area, especially handle and operate and perform cleaning tasks and maintain adequate hygiene.

Do not make any changes to Coffee Machine and its accessories without JDE's written consent.

Do not use the Coffee Machine for purposes that are not specified in this manual without JDE's written consent, so as to prevent death or injury or product damage.

Do not immerse the appliance, plug or mains cable in water.
There is a danger of electric shock.

This machine is not available to persons (including children) with reduced physical, sensory or mental capabilities, or lack of experience and knowledge, unless they have been given supervision or instruction concerning use of the appliance by a person responsible for their safety.

Children should not play with the machine.

Do not use the machine if the mains cable and plug are damaged or the appliance has fallen over.

Cleaning and user maintenance shall not be made by children without supervision.

⚠ Warning

Do not use the machine unless you have read and understood this manual and manuals for accessories.
Obey the safety instructions while using the product.

In case of emergency (e.g., the machine catches fire or becomes abnormally hot or noisy), disconnect the power immediately and turn off the water supply.

If the supply cord is damaged, it must be replaced by the manufacturer, its service agent or similarly qualified persons.

Children should be supervised to ensure that they do not play with the machine.

Only trained personnel should have access to the operator key.

Use the inlet hose included with the machine to connect it to the water mains in accordance with the national rules applicable in the country where machine is installed. Only connect the machine to the water supply using the new hoses included in the delivery. Never reuse damaged hoses.

The appliance is not suitable for installation in an area where a water jet could be used. This appliance must not be cleaned with a water jet or a pressure washer.

Prevent the appliance from freezing. If the water in the hydraulic system does freeze, do not use the appliance. Unplug it an contact a technician to inspect it an perform necessary repairs.

Only plug the appliance into a properly installed earth-grounded safety socket with line voltage matching the technical data for the appliance.

2.5 General

⚠ Warning

The liquids delivered by the dispenser are hot! Avoid scalding! Keep hands and other body parts away from the dispenser while drinks are being dispensed and during the rinsing program.

Do not place cups, pots, or containers filled with hot liquids on top of the dispenser. There is the risk of being scalded, in case the cups/pots/ containers fall down.

Keep sufficient space around the dispenser to get away easily in case of hot liquid splashes.

This dispenser is not intended for use by persons (including children) with limited physical, sensory and mental faculties, or persons with insufficient experience and/or knowledge of the dispenser. This does not apply if they are supervised by a person responsible for their safety or have received instructions on how to use the dispenser.

Place the dispenser on a table or counter with a minimum height of 60 cm/24 in to avoid that young children can press a drink button.

Keep ventilation openings, in the appliance enclosure or in the built-in structure, clear of obstruction.

Do not use mechanical devices or other means to accelerate the defrosting process, other than those recommended by the manufacturer.

Do not damage the refrigerant circuit.

Do not use electrical appliances inside the food storage compartments of the appliance, unless they are of the type recommended by the manufacturer.

When positioning the appliance, ensure the supply cord is not trapped or damaged.

Do not locate multiple portable socket-outlets or portable power supplies at the rear of the appliance.

Do not store explosive substances such as aerosol cans with a flammable propellant in this appliance.

⚠ Caution

Check and empty the drip tray of the dispenser regularly to avoid the risk of being scalded and to avoid a wet floor (slip danger) when (hot) liquids spill out of the drip tray.

Please read the instructions in this operator manual carefully before using, cleaning or moving the dispenser. Ensure that you and all other persons who operate, clean or move the dispenser are familiar with, and act according to the safety and hygiene aspects of the dispenser.
You may only use the dispenser according to the instructions in this operator manual for the delivery of drinks. The manufacturer is not liable for any damage or injury resulting from improper use of the dispenser or from non-compliance with the procedures described in this operator manual.

- The installation, servicing, repair and programming of the machine may only be carried out by an authorised and appropriately trained service technician assigned by your Cafitesse system supplier.
- Only use original spare parts for the operation of the dispenser.
- The operation, filling and cleaning of the dispenser may only be carried out by authorised and trained personnel.
- The dispenser is not suitable for outdoor use.
- The dispenser must be installed where it can be supervised by trained personnel.

2.6 Refrigeration system information

- Do not use mechanical devices or other means to accelerate the defrosting process, other than those recommended by the manufacturer.
- Do not damage the refrigerant circuit.
- Do not use electrical appliances inside the food storage compartments of the appliance, unless they are of the type recommended by the manufacturer.
- Do not store explosive substances such as aerosol cans with a flammable propellant in this appliance.
- The appliance contains hydrocarbons in the cooling unit. Only qualified personnel may perform maintenance or recharging of the refrigerant circuit.
- Do not put flammable products or items that are wet with flammable products inside the appliance. Do not store flammable gas and liquid in the appliance.
- Do not touch the compressor or the condenser, these surface can reach high temperatures!
- If damage occurs to the refrigerant circuit, make sure there are no flames or other sources of ignition in the room. Ventilate the room to prevent fire.

2.7 Replacement of Worn Parts

⚠ Warning

Defects caused by natural wear by liquids, are deemed not to be subject to warranty or guarantee.

Please observe that the CAFITESSE QUANTUM TOUCH contains components that are subject to wear by liquids through normal usage even if the machine is maintained under the stipulated service procedures. This particularly includes mechanical components and parts that are in contact with hot water by liquids, such as hoses, seals, valves etc.
Defects caused by natural wear by liquids, are deemed not to be subject to warranty or guarantee. Defective parts should however always be replaced by an authorized service technician, trained by the manufacturer.

2.8 Disposing of the Packaging Material

⚠ Warning

The packaging is made from various recyclable materials. It is recommended that the packaging material is retained for future transport.
If you wish to dispose of the packaging material after installation, please recycle or dispose of materials in an environmental manner.

2.9 Disposal of the machine

Disposal of the machine should be in accordance with regional disposal regulations.

The machine is subject to the Waste Electrical and Electronic Equipment Directive (WEEE/EU directive) and can not be mixed with normal domestic waste.

Do not release the compressed refrigerant into the atmosphere without authorization, reclamation by an authorized person may be required. If refrigerator gas reclamation is required, this must be done by a licensed, qualified individual.

2.11 Servicing the dispenser

⚠ Warning

If the mains cable of the dispenser is damaged, switch the dispenser off and contact your Cafitesse system supplier to have the mains cable replaced.

The servicing, repair and programming of the dispenser may only be carried out by authorised and appropriately trained service technicians assigned by your Cafitesse system supplier.

2.12 Cleaning the dispenser

⚠ Danger

DO NOT SPRAY OR SPLASH THE DISPENSER WITH WATER. DO NOT USE A WATER JET FOR CLEANING. NEVER IMMERSE THE DISPENSER IN WATER.

NEVER TILT THE DISPENSER TO CLEAN BEHIND OR BELOW IT.
AVOID SCALDING! THE BOILER CONTAINS VERY HOT WATER THAT CAN SPILL OUT IF YOU TILT OR MOVE THE DISPENSER.

⚠ Caution

Clean all dispenser parts that come into contact with the product with a cleaning agent. Only use cleaning agents recommended by the food industry and your Cafitesse system supplier. For safe handling, dosing and use of cleaning agents, follow the instructions on the label of the cleaning agent.

Clean the dispenser regularly
1. Clean the surface around the dispenser.
2. Wash your hands before touching the dispenser or a product pack.
3. Clean the dispenser according to the instructions in the operator manual (see chapter "Cleaning the dispenser").
4. During cleaning, check the "Best before" and "Expiry" dates on the product pack in the dispenser. If the "Best before" or "Expiry" date is expired, replace the product pack.
5. Schedule cleaning activities and record them.

2.13 Food safety instructions (HACCP)

As the operator of the dispenser, you are responsible for its safe and hygienic operation. Please comply therefore with the following instructions in order to meet the food safety standards.

Storage of product packs

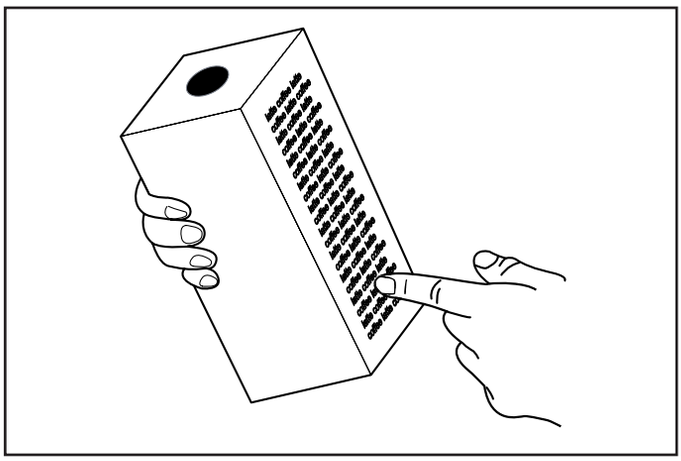

1. Store the product packs according to the description on the packaging.

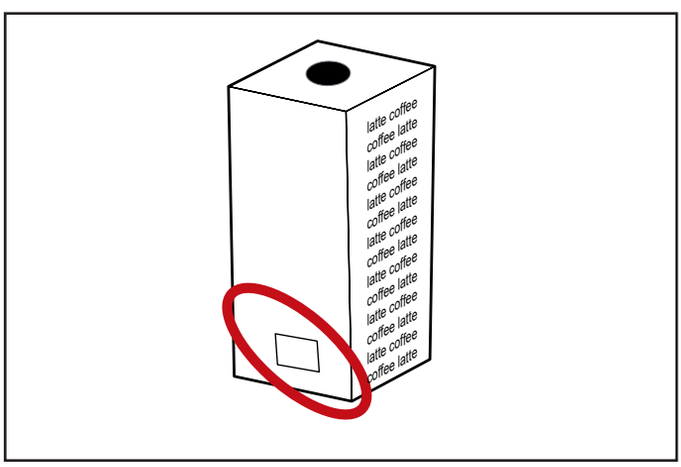

2. Please note the "Best before" date printed on the packaging. Always use the product packs according to the "first in -first out" principle (product packs stored first must be used first). Do not use a product pack if the "Best before" date has expired.

NOTE:
When the product pack is open, ensure that no liquid spills out onto clothing, the floor or other equipment.

3- TRANSPORTATION AND STORAGE

⚠ Danger

Do not tilt the machine during transportation.
Do not stack several machines on top of each other.

Do not put any other objects on the machine.
Do not expose the machine to any jolts or vibrations while it is being transported.

Keep packaging materials away from children.

⚠ Warning

The dispenser may not be subject to frost during operation, storage or transport.

Operate and store the machine only at temperatures between +5 °C and +32°C.
Operate and store the machine only at a humidity of 10 % to 90 % RH.
Always keep the machine dry and free from dust.

⚠ Caution

Recycle the carton and all packing materials.

Always store and transport the dispenser in the original packaging.
Before storing or transporting the dispenser:

- Place the product packs in the refrigerator.
- Clean the dispenser.
- Contact your Cafitesse system supplier so that an authorised and trained service technician can drain the water from the boiler and protect the dispenser against frost damage.

If you suspect there is frost damage following storage or transport, contact your Cafitesse system supplier to have the dispenser checked and a function test implemented.

4- TECHNICAL SPECIFICATIONS

4.1 Specifications

Facts	Description	
Weight	42 Kg (Empty) 52 Kg (Operational with filled water tank)	
Cup volume	Defaults for coffee: S=100ml, M = 125ml, L = 180ml	
Pot volume	Defaults for coffee: S=750ml, M = 1000ml, L = 1250ml	
Power supply	200-240V, 1 phase, 10A	Max. 2200W
	200-240V, 1 phase, 13A	Max. 2700W
	200-240V, 1 phase, 16A (default)	Max. 3500W
	200-240V, 1 phase, 30A	Max. 6100W
	380-415V, 3 phases, 16A	Max. 8200W
	440V, 3 phases, 16A	Max. 9000W
Hourly capacity -Configuration: 200-240V, 1 phase, 16A. -Water inlet Temperature: 25ºC -Measured in cups of 125 mL	41 L/h	
	325 Cups/h	
Storage and operating environment	Temperature: 5 - 32ºC Humidity: 10% - 90%	
Cooling compartment	Capacity: 2 x 2L/1.25L/0.75L packs Temperature : 2ºC – 5ºC	
Boiler	Volume: 9.6L Temperature: Adjustable from 80 to 97 ºC	
Standard water connection	1/2” or 3/8” supply line with 3/4” BSP connecting piece	
Connection Water Pressure	Dynamic pressure: 0.8 to 10 Bar at 9 L/min	
	Static pressure: 0.2 to 10 Bar	
Refrigerant	0.016 kg of R600a	

4.2 Dimensions - Q100

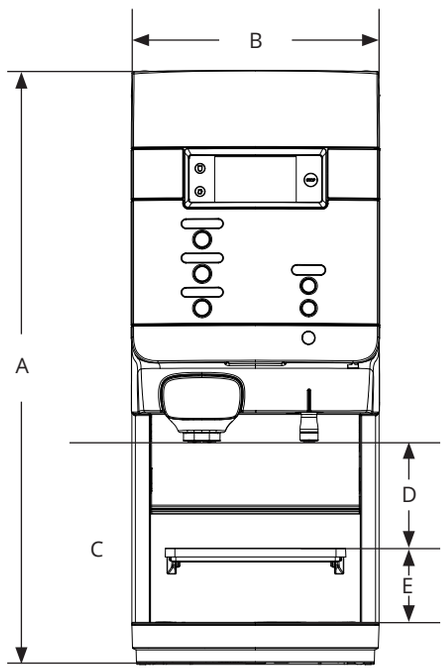

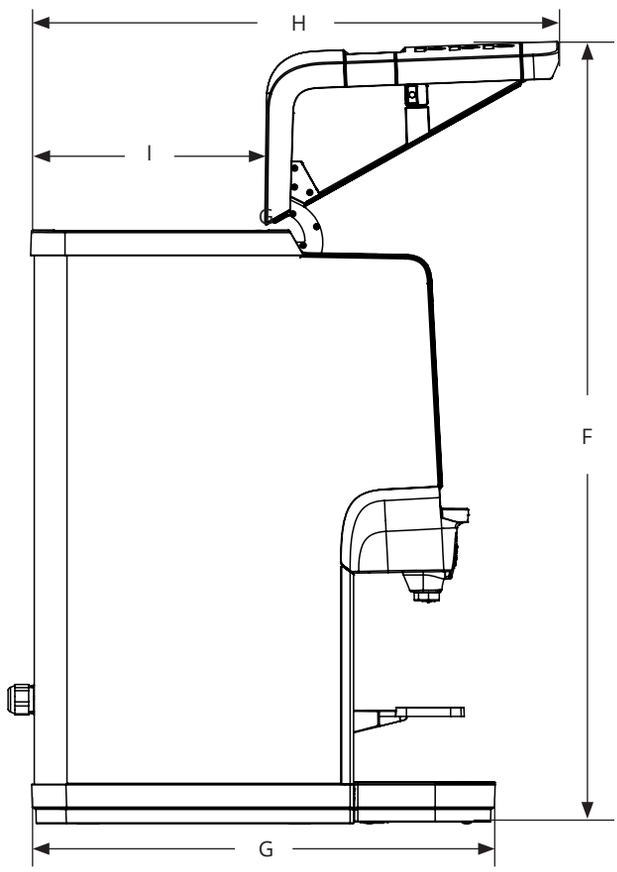

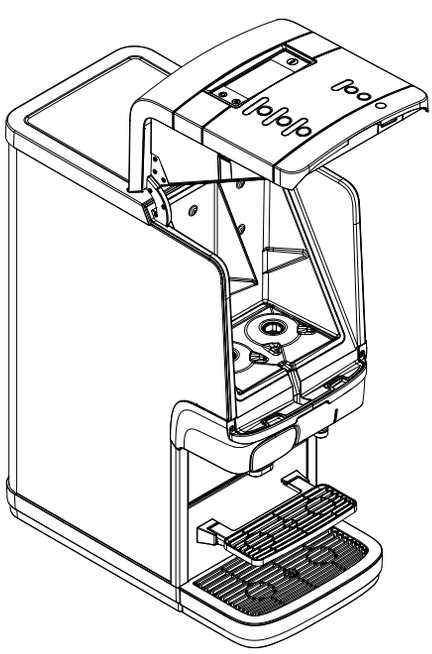

- A = 69 cm
- B = 29 cm
- C = 26 cm
- D = 12 cm
- E = 8.6 cm
- F = 91 cm
- G = 54 cm
- H = 62 cm
- I = 28 cm

4.3 Dimensions - Q200

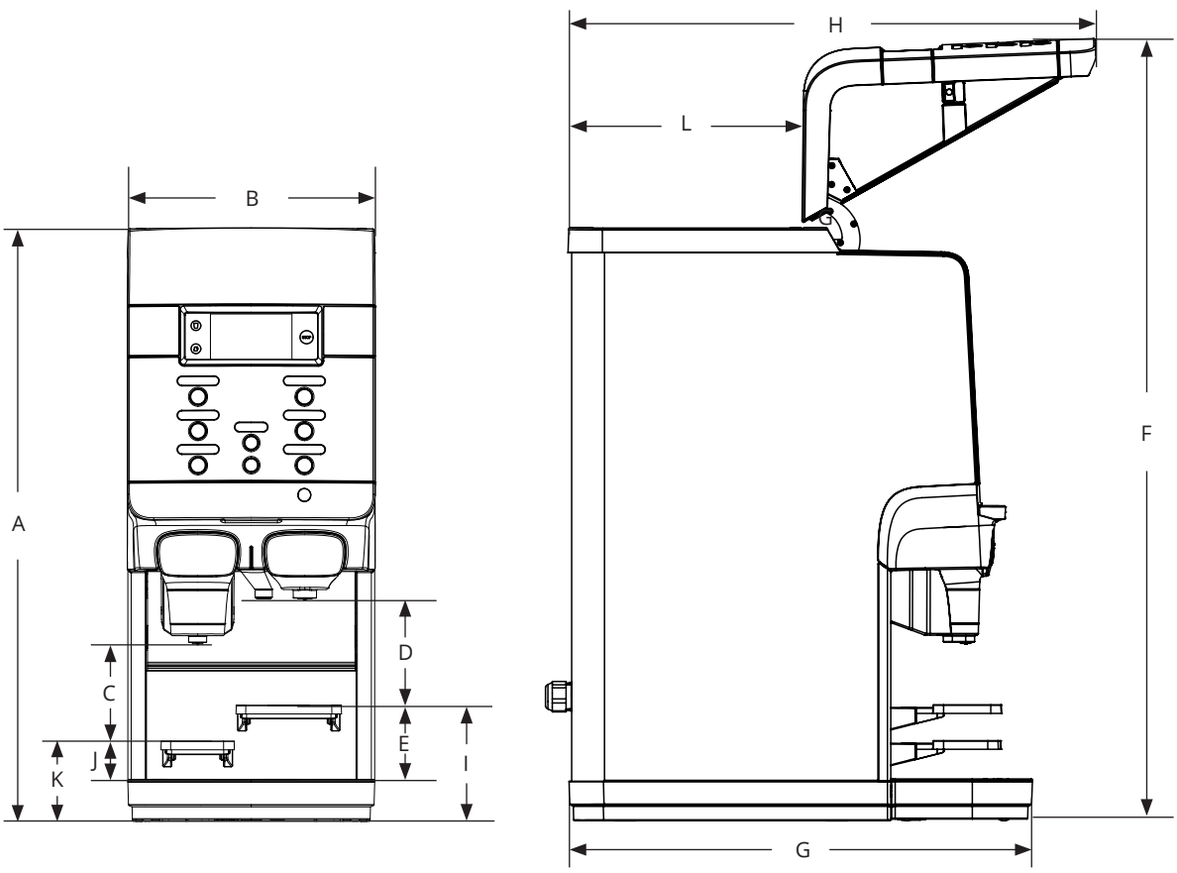

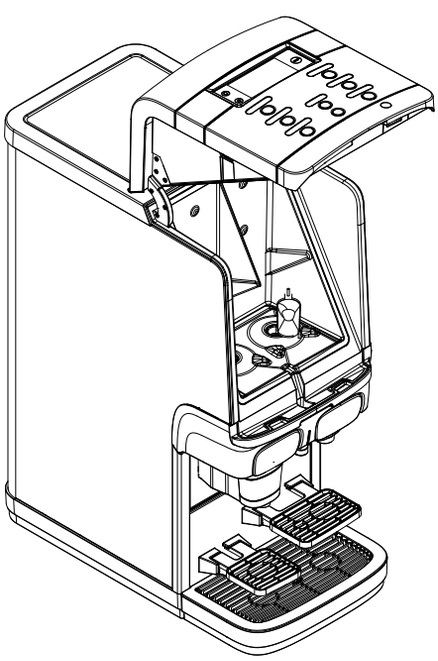

- A = 69 cm
- B = 29 cm
- C = 11 cm
- D = 12 cm
- E = 8.6 cm
- F = 92 cm
- G = 54 cm
- H = 62 cm
- I = 13.5 cm
- J = 4.5 cm
- K = 9 cm
- L = 28 cm

4.4 Dimensions - Q300

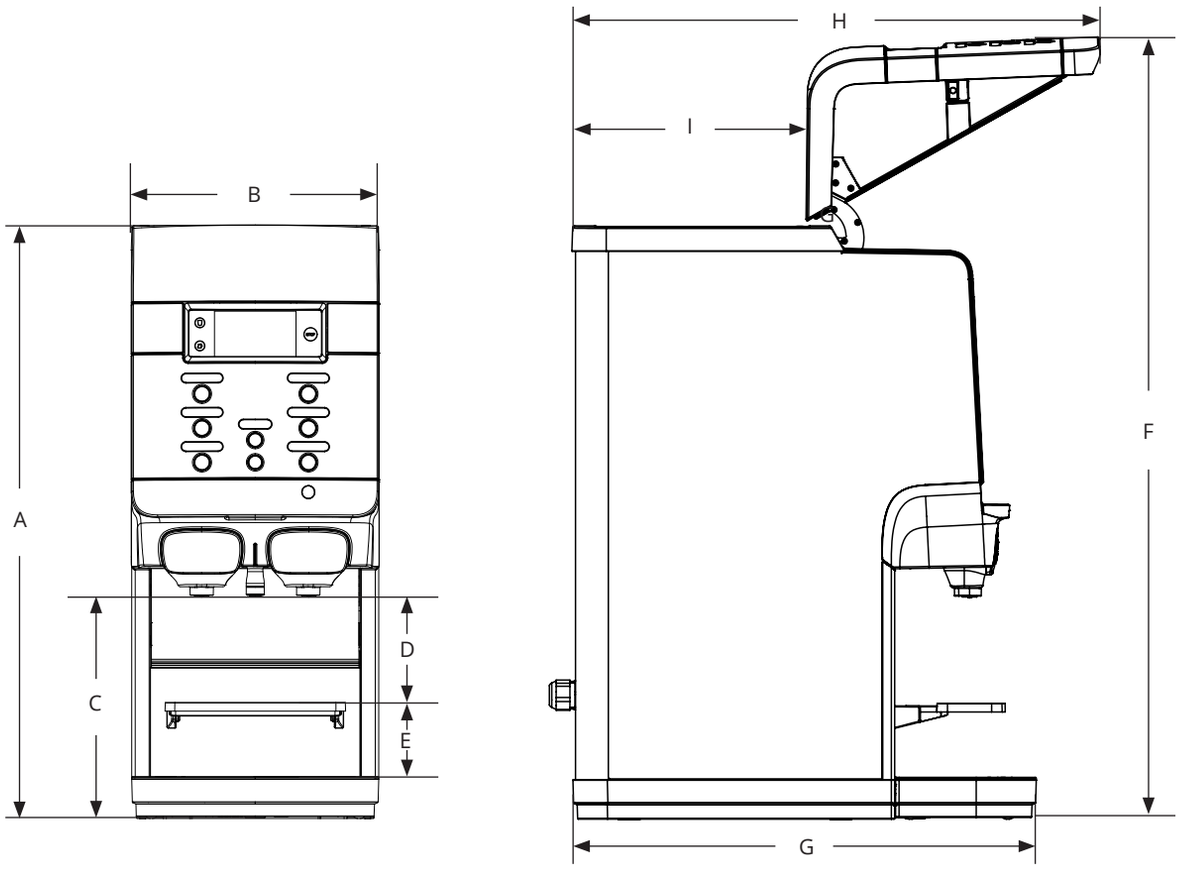

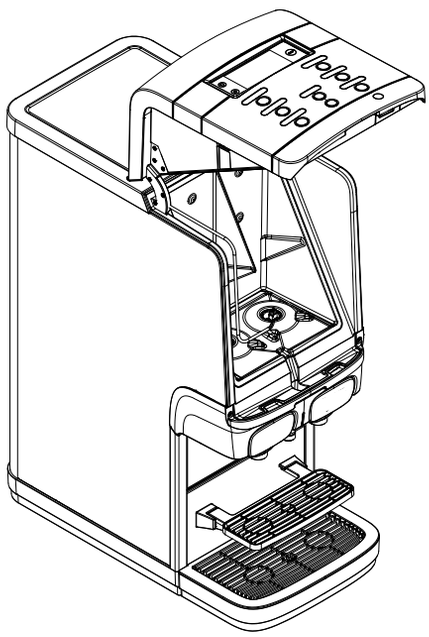

- A = 69 cm
- B = 29 cm
- C = 26 cm
- D = 12 cm
- E = 8.6 cm
- F = 91 cm
- G = 54 cm
- H = 62 cm
- I = 28 cm

5- PART OVERVIEW DESCRIPTION

5.1 Front view & back view

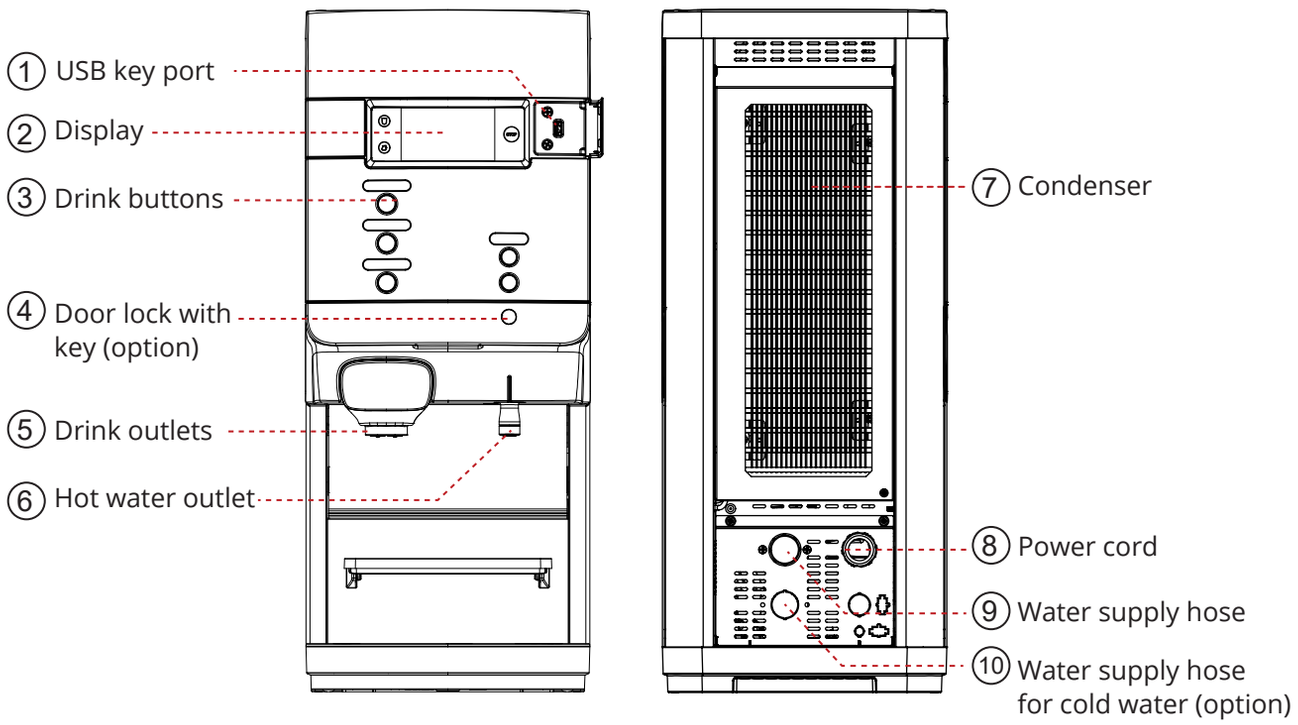

5.2 Interior view

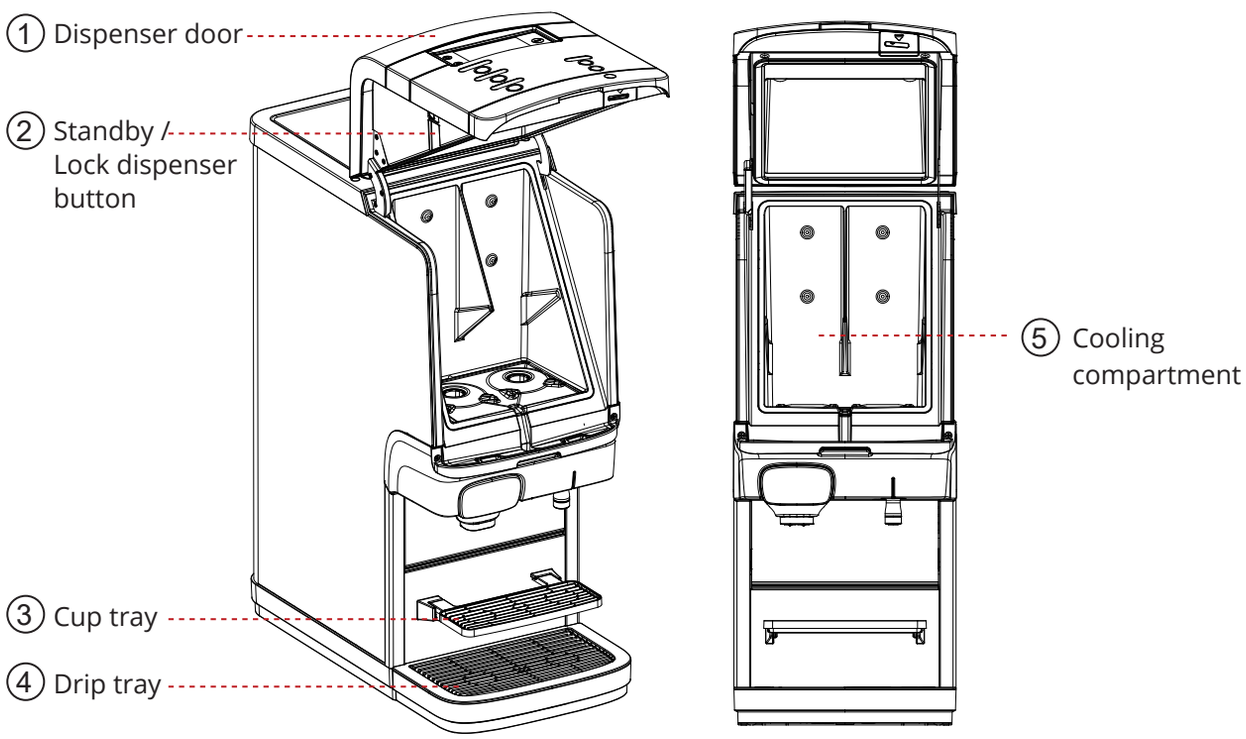

5.3 Button functions

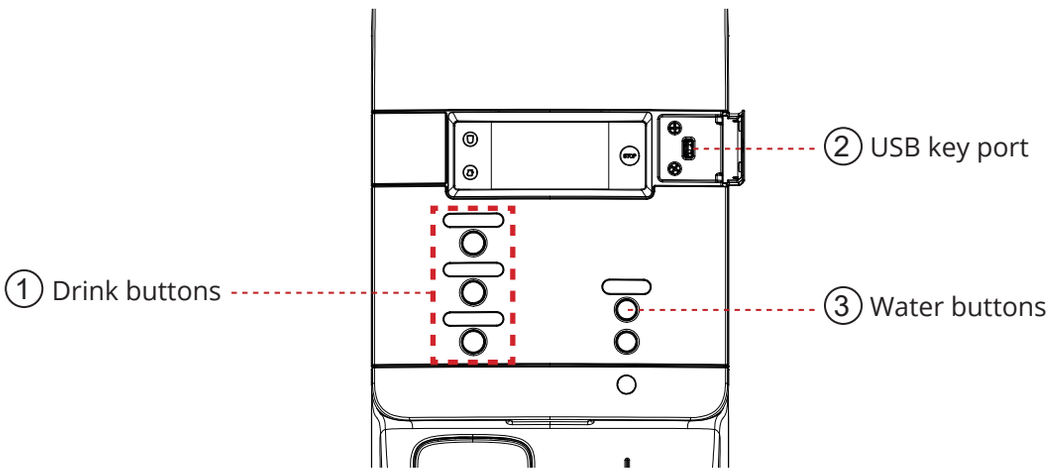

NOTE:
Some options are not available in all markets.

5.4 Display overview

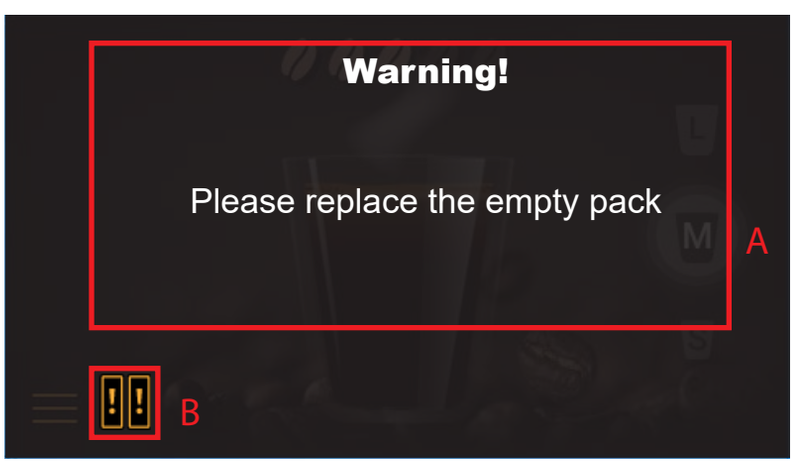

Message area (A) – display messages*
*See Troubleshooting section for message details.

Icon Area (B) Legend	
	Replace empty pack
	Cleaning required
	Dispensing locked
	Dispensing unlocked

6- INSTALLATION AND INITIAL START-UP

⚠ Warning

Sharp edges! Risk of cuts to hands.
Wear cut-resistant gloves when carrying out work in the vicinity of sharp edges.

It is essential to read this operating manual thoroughly before installing the machine and starting it up for the first time.

⚠ Caution

On delivery, check whether the machine has sustained any obvious damage during transport and/or whether there is any hidden damage. If damage is identified, inform the relevant transport company immediately.

6.1 Unpack the Machine

⚠ Warning

Dispose of the packaging professionally and environmentally.

Remove all protective film during installation before powering the machine ON for the first time.
This will prevent the film melting or becoming stuck due to high temperature when the machine is heating up.

The size of the packing box is 45cm × 68cm × 91cm.
We strongly recommend that you keep the packaging after disassembling the machine for future transport.

6.2 Install the Machine

⚠ Danger

Risk of electric shock.
Never touch live cables and components with wet hands.
Observe the accident prevention regulations regarding electricity.

⚠ Warning

Only maintenance technician can install the machine.
The machine can only be installed in suitable places, and supervised by trained personnels.

The machine must be set up and operated in dry, well-ventilated rooms.
Ensure that there is enough space around the machine to perform maintenance, cleaning and repair work.
Ensure that the water connection line is not kinked.

Make sure that the electric data of the nameplate are compatible with the operating conditions where you will install the machine.

⚠ Caution

Before operating the machine, check the details of the mains power supply in the country of installation.
Do not connect the machine to a mains supply if voltage fluctuations.

Be careful of contamination of the water supply!
Only use water hoses approved by the manufacturer and suitable for drinking water.
Flush the water hoses thoroughly prior to use.

6.3 Dispenser start-up

When installing the machine, unobstructed dimensions are required as follow image:

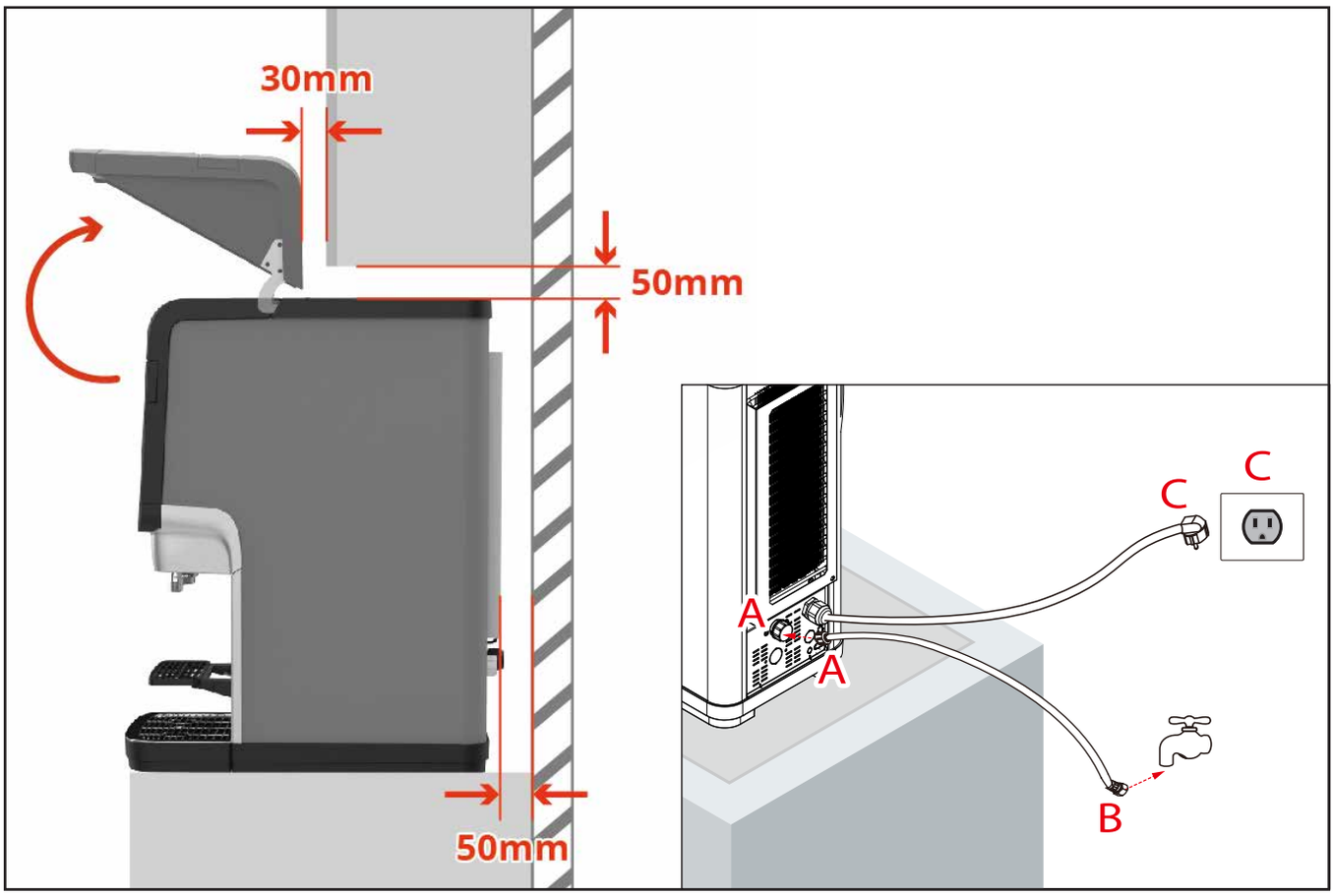

1. Place the dispenser on a flat horizontal surface.
2. Connect the water inlet hose (A to A).
3. Then open the water tap (B) and check for leaks.
4. Insert the power plug in the earth wall socket (C to C) and then the dispenser will start automatically.
5. Dispenser will fill and heat up the boiler automatically.
6. Drinks will be delivered when the water in the boiler has reached the appropriate temperature.

NOTE:
It may take 20 hours to cool down the cooling compartment completely.

NOTE:
Connect the machine to an easily accessible supply point so that the water supply can be cut off quickly in an emergency.

NOTE:
The electrical connection to the machine (wall socket), must contain earth leakage circuit breaker protection (ELCB)!

6.4 Dispenser storage

Take the following preparations when the dispenser will not to be used for a long period (e.g.- holidays):

- Remove the product packs and check the expiry date, if they will soon expire they should be disposed of.
- Store opened product packs in a refrigerator until you switch the dispenser back on and it has cooled down again. If the expiry date has passed, the packs should be disposed of.
- Clean and flush the dispenser.
- Disconnect the power plug from the socket.
- Close the water tap.

NOTE:
If the dispenser has been shut down for a longer period, the date and time must be reset so the programmed cleaning cycles and ECO settings are reactivated.

7- INGREDIENT PACK HANDLING

NOTE:
- *Always observe basic and personal hygiene, wash hands before handling ingredient packs.*
- *Use only food-grade cleaning agents for the drink dispenser. Clean the dispenser's exterior parts with a soft, clean, damp cloth.*
- *Use only fresh drinking water.*

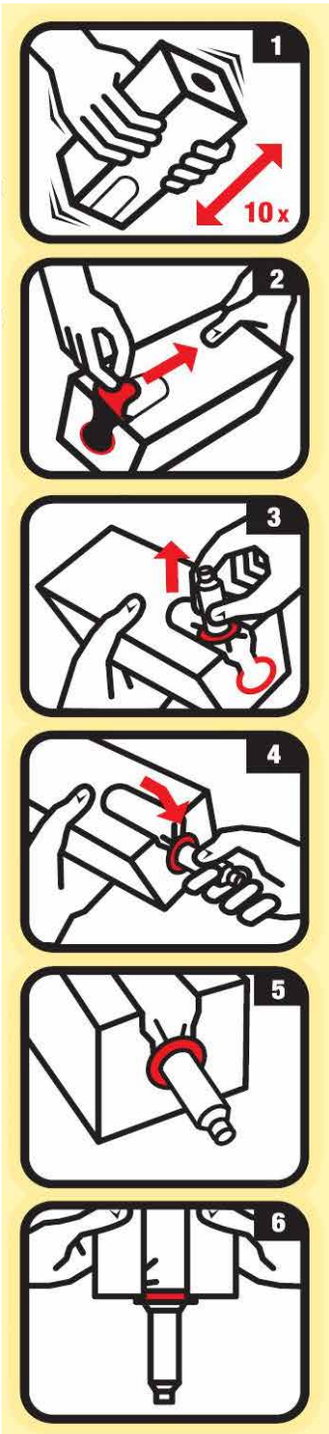

- Wash hands first, shake pack at least 10 times, remove plastic film.
- Pull perforated strip back from pack.
- Take dosing tube out of pack.
- Pull dosing tube towards red ring on pack.
- Red ring on dosing tube must cover red circle on outside of pack, check that dosing tube is straight and correcly positioned.
- Reverse pack and place pack in dispenser.

8- DAILY OPERATION

8.1 Safety for Operation

⚠ Danger

Never place your hands and fingers directly under the water outlet during operation to avoid burns and severe burns.

⚠ Warning

Do not use the machine unless you have read and understood this manual.
Obey the safety instructions while using the machine.

The drinks dispensed are hot, avoid scalding!
Keep hands and other body parts away from the dispenser while drinks are being delivered.
Never leave children unsupervised near the dispenser.

Do not directly or indirectly contact the live parts, damaged power lines or plugs. Electrical equipment must be operated by an electrician or a person supervised by an electrician in accordance with electrical regulations.

The screenshots shown in this document are purely indicative and serve as an illustration of certain procedures or descriptions. The contents of these screenshots are not binding and must under no circumstances be used for the setting or the operation of the machine.

8.2 Place cups and pots correctly

⚠ Caution

Place your cup or pot under the outlet below the drink button of your selection.

The dispenser has two product outlets:

- Left: for coffee and tea
- Right: for hot water

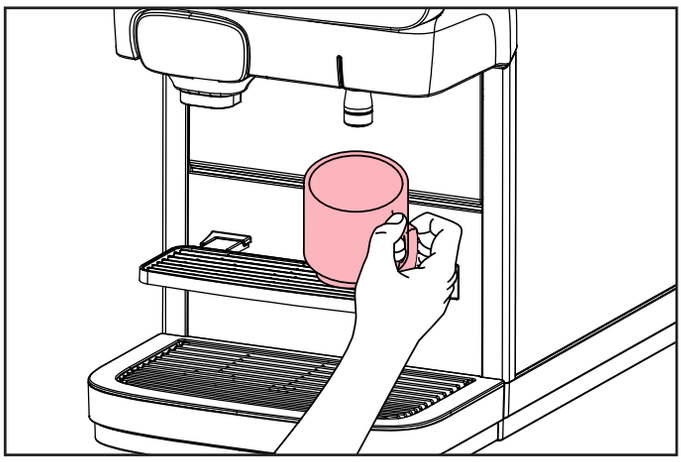

1. Place your cup on the cup tray.

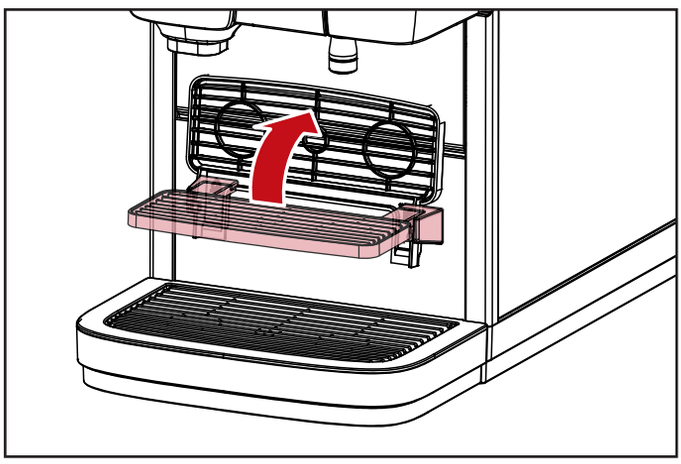

2.1. Tilt the cup tray upwards to provide enough room for a pot.

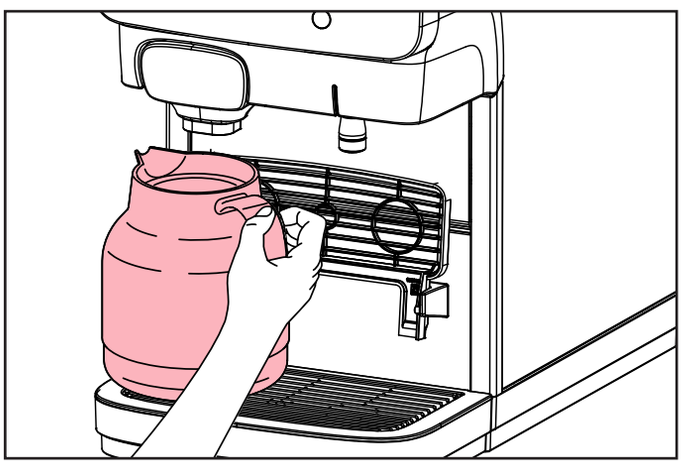

2.2. Place the pot on the drip tray. A special dispenser foot may be required for larger pots.

8.3 Drink delivery

⚠ Warning

The liquids dispensed by the dispenser are hot! Avoid scalding! Keep hands and other body parts away from the dispenser while drinks are being delivered. Never leave children unsupervised near the dispenser.

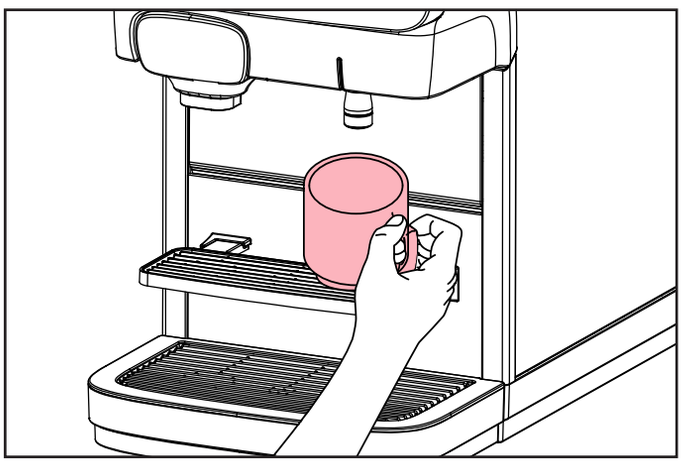

1. Place your cup on the cup tray.

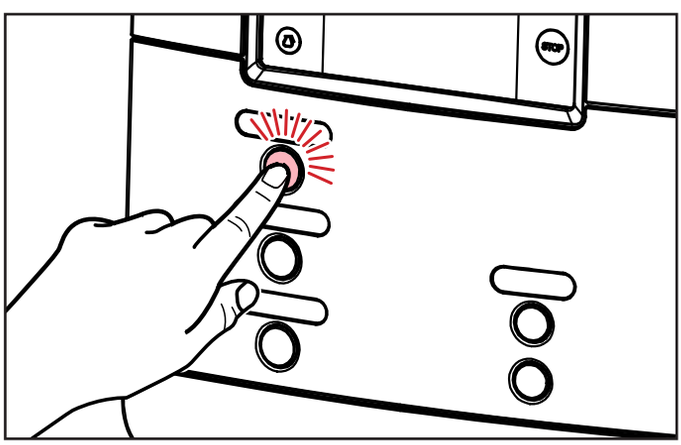

2. Press the drink button of your choice. The drink will be delivered via the corresponding outlet.

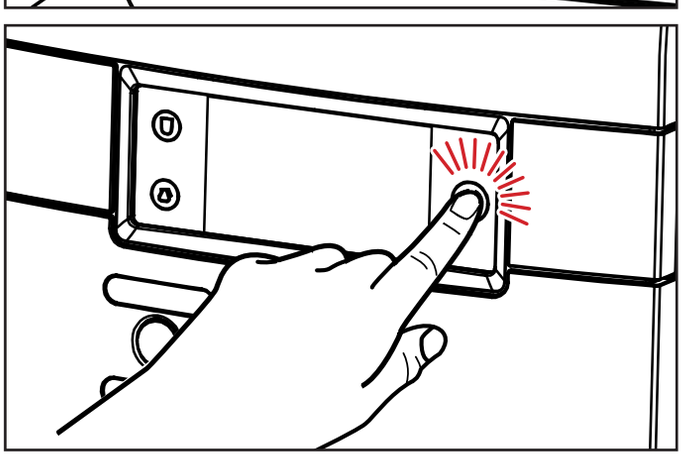

3. Press STOP on the screen if you want to interrupt or cancel the drink delivery.

8.4 Drink delivery with preselections

Your dispenser supports preselection options. The service technician may have activated these preselection options during installation. When the preselection button is pressed, the following preselection options are shown on the display:

- **COLD**-preselection (option)
- **VOLUME**-preselection (small - medium - large)
- **STRENGTH**-preselection (mild - normal - strong)

8.4.1 COLD-preselection (option)

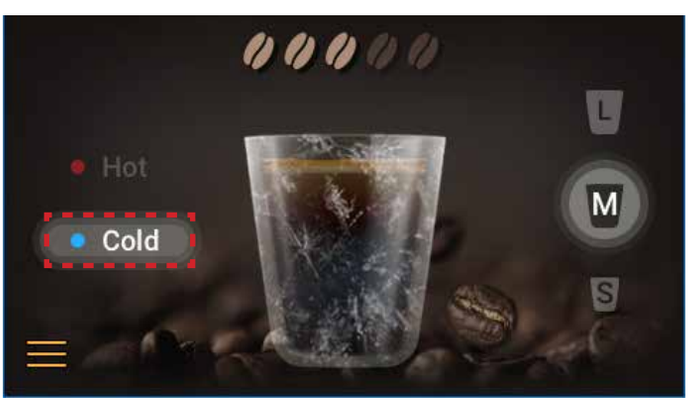

Press the touch screen and choose "COLD" according to demands.

8.4.2 VOLUME-preselection

Press the touch screen and choose "VOLUME" according to demands.

8.4.3 STRENGTH-preselection

⚠ Warning

The liquids dispensed by the dispenser are hot! Avoid scalding! Keep hands and other body parts away from the dispenser.

Press the touch screen and choose "STRENGTH" according to demands.

NOTE:
All preselection can be combined with one another.

NOTE:
If you press a preselection, but do not press the delivery button, the dispenser will return to the default state after a few seconds.

8.5 Inserting and removing product packs

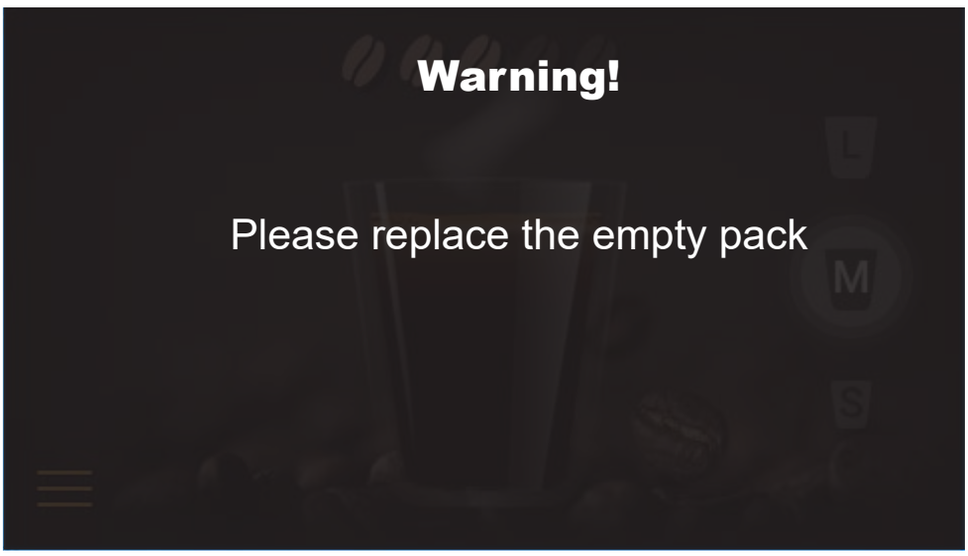

If you select a drink and the corresponding product pack is empty, a drink will not be delivered. The WARNING - "please replace the empty pack" will be shown on the display.
The delivery of hot or cold water is still possible.

NOTE:
You can enter the operator number yourself via the maintenance *menu (see "Programming the dispenser")*

8.6 Replacing an empty product pack

⚠ Caution

Before inserting a new product pack, follow the instructions in chapter "Food safety instructions (HACCP)".

Read the instructions on the product pack. Never use a damaged product pack. Do not use a product pack if the "Best before" date has expired.

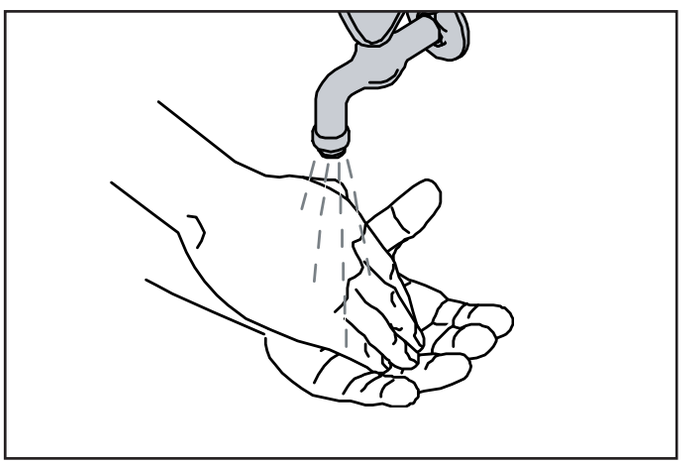

1. Wash your hands before touching a product pack. Do not use a frozen product pack. Then shake the product pack at least 10 times.

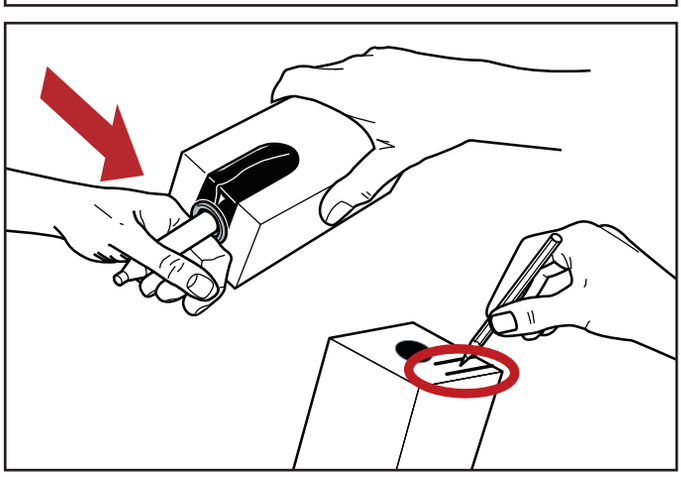

2. Remove the plastic wrapper and write the "Expiry date" on the product pack. Follow the instructions on the product pack to open the doser.

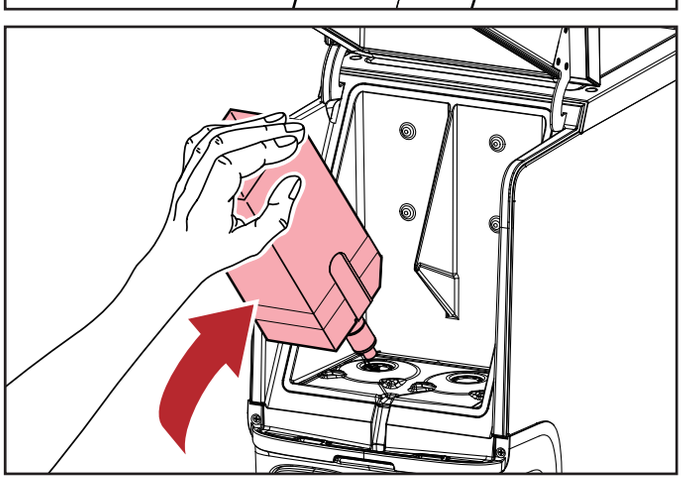

3. Open the dispenser door and insert the product pack. Then close the dispenser door. Dispense a test drink.

8.7 Switching on the dispenser

⚠ Caution

Ensure that the dispenser is connected to the water supply.

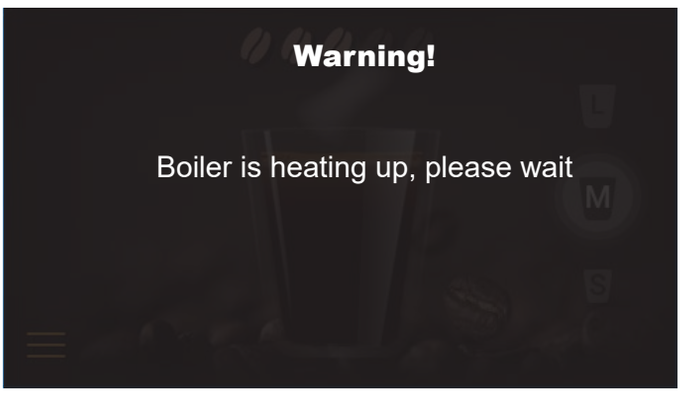

1. Open the water tap and Insert the power plug. The dispenser starts heating up water and starts cooling down the cooling compartment. Drink delivery will be blocked until the water in the boiler has reached the correct temperature. A flashing thermometer and the warning - "Boiler is heating up, please wait.“ will be shown on the display.

2. Once the water has reached the preset temperature, the display shows the home screen. The dispenser is now ready for operation.

NOTE:
Depending on the heating capacity of the dispenser type, the heating takes 17 minutes or less. The cooling of the product compartment can take 20 hours or less.*

**Heating time at default power configuration: 200-240V, 1 phase, 16A*

NOTE:
If the dispenser has been shut down for longer periods, the date and time must be set, so that the dispenser and the programmed cleaning cycles are reactivated.

8.8 Switching off the dispenser

⚠ Warning

Do not freeze product packs!

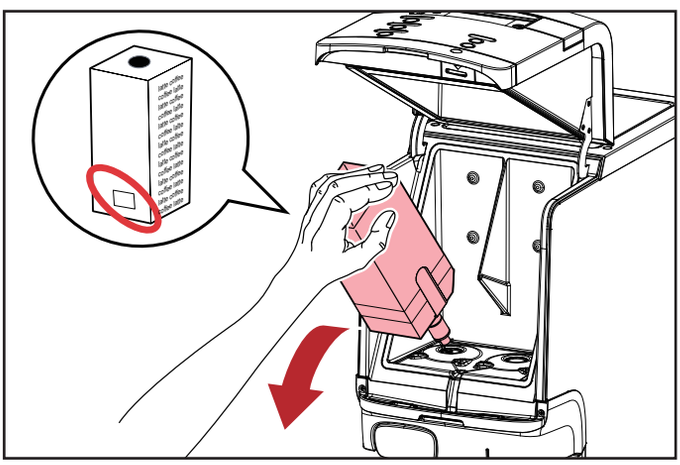

1. Remove the product pack and check the "Expiry" date. Store the product pack in a refrigerator until you switch the dispenser back on again. When the expiry date has passed, throw the product pack away.

2. Clean the dispenser (Follow instructions in section 9.5 & 9.6). Pull the power plug out of the socket. Close the water tap.

8.9 Locking/unlocking the dispenser

1. When the LOCK icon is displayed on the screen, the drink delivery is blocked. The cooling compartment and the boiler will remain in operation. Press the LOCK icon to unlock the machine.

2. Enter PIN (1234) to access.

3. Then the machine will be unlocked.

9- CLEANING

9.1 Safety for Cleaning

⚠ Danger

Do not touch live cables and components with wet hands.
Observe the accident prevention provisions when handling electrical power.
Disconnect the power supply to the CAFITESSE QUANTUM TOUCH before any maintenance, cleaning and repair work and make sure it does not reactivate.

⚠ Warning

Only use cleaning materials that are suitable for food environments and that have been recommended by JDE to clean your machine.
Unsuitable cleaning materials that have not been approved by JDE may result in increased wear or cause machine defects.
Always observe the instructions for use and the safety advice provided by the manufacturer!

High temperature surfaces inside the Coffee machine!
Cool down the machine before cleaning and maintenance work.

Thorough cleaning and maintenance are crucial to ensure that the drinks dispensed by the machine meet strict hygiene requirements.
The service offered by the automatic cleaning program is a good example of this.
It is essential that cleaning and maintenance instructions are followed to ensure high quality beverages, and hygienic, reliable operation of the machine. Only by maintaining carefully and observing the cleaning and maintenance intervals can you ensure proper functioning of the machine, and the best quality of the Coffee drinks for customer satisfaction.

9.2 Cleaning procedures

⚠ Caution

It is mandatory to run the “Cleaning” program at least once a week to guarantee food safety.

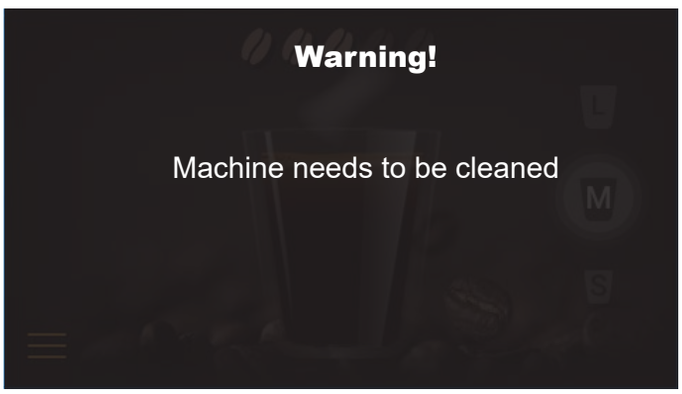

Fig.1

There are two different cleaning programs:
- **“Flushing”** the drink outlets.
- **“Cleaning”** the cooling compartment and the drink outlets.

Your Service provider can select the weekdays for **“Flushing”** and **“Cleaning”** programs in the operator menu under **CLEANING DAYS.**

When to clean the dispenser
Run the cleaning program when the warning appears in the display (See Fig.1).
If the dispenser is not cleaned and/or flushed within 24 hours the machine will block dispensing.
The cleaning program must run to completion before the dispenser will resume drink delivery.

9.3 Exterior cleaning

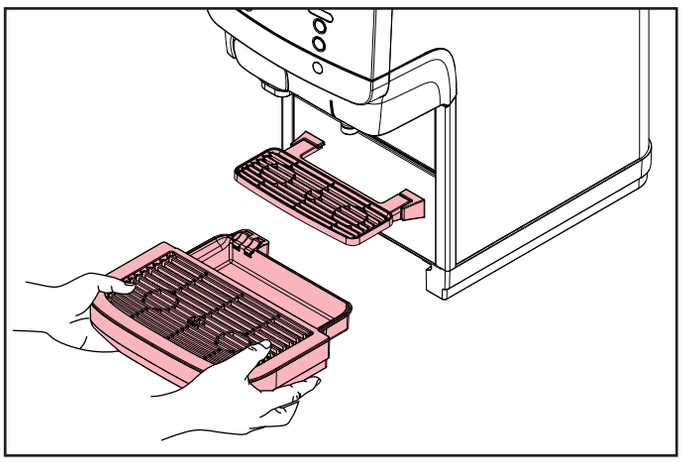

1. Remove the drip tray and cup tray. Empty the drip tray if needed. Clean the drip tray and cup tray with a cloth or brush under warm running water. Either in a dishwasher for 15 minutes in warm water with a cleaning agent, approved by the food industry.

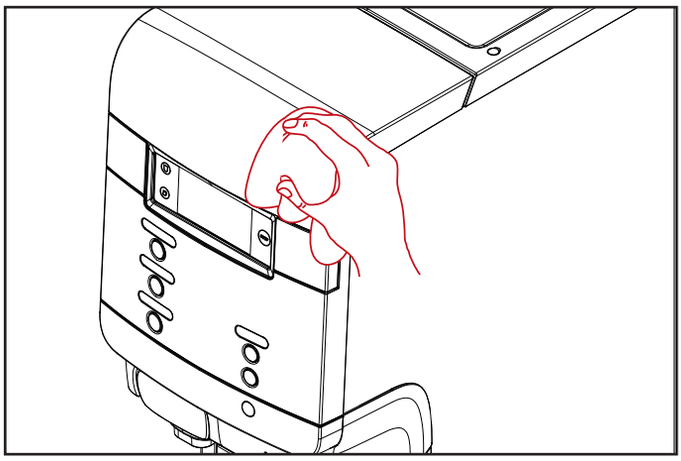

2. Clean the exterior of the dispenser with a damp, clean cloth.

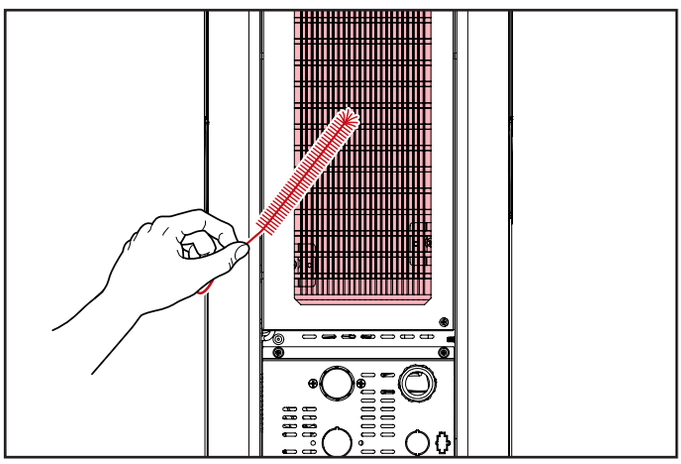

3. **Clean Condenser Frame:** Make sure the back of machine faces the cleaner. Use the brush to clean the condenser. (Periodic cleaning monthly, or more frequently in case of placement in a dusty location.). Move the machine back to working position.

NOTE:
It is advised to clean the exterior of the dispenser daily.

NOTE:
Use of aggressive cleaning agents like alcohol might permanently damage the machine surface.

9.4 Flushing

⚠ Warning

The flushing water is very hot! Avoid scalding! Keep hands and other body parts away from the dispenser during the flushing process. Never let children perform the flushing procedures.

1. Press (A) and then press (B) to enter the MAINTENANCE mode.

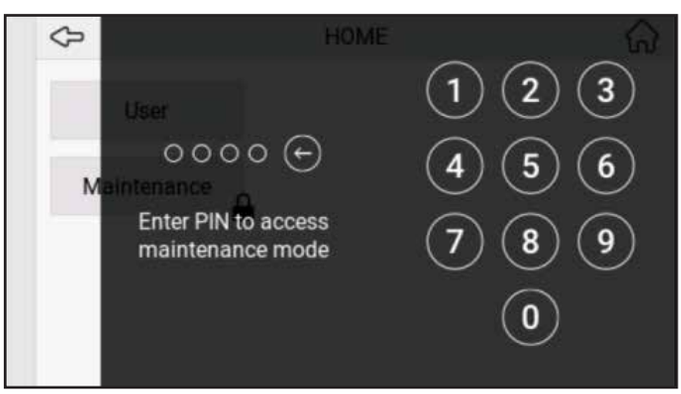

2. Enter PIN to access maintenance mode.

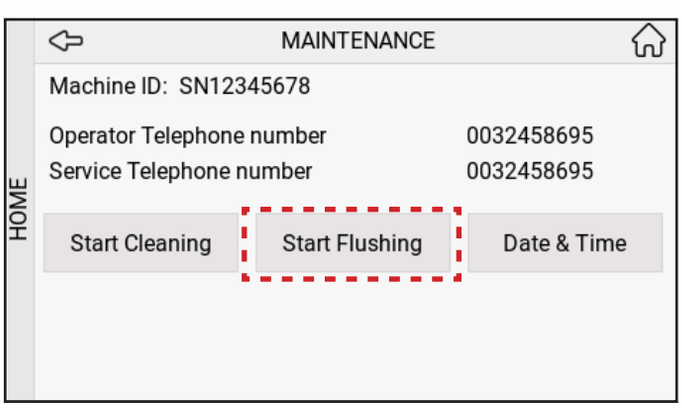

3. Press "Start Flushing".

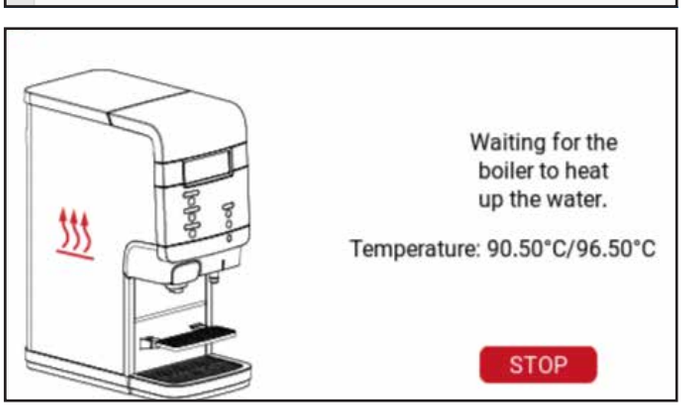

4. Waiting for the boiler to heat up the water.

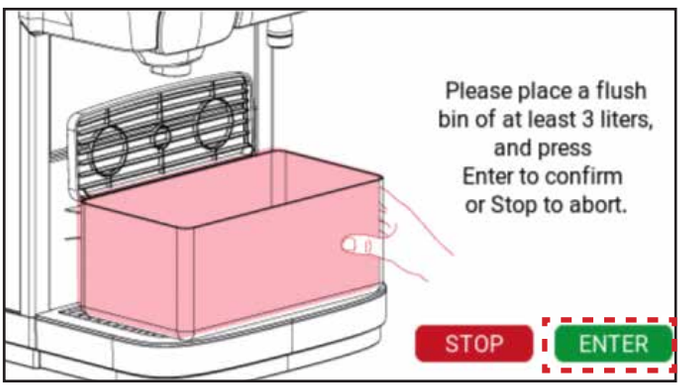

5. Place a flush bin and press "Enter".

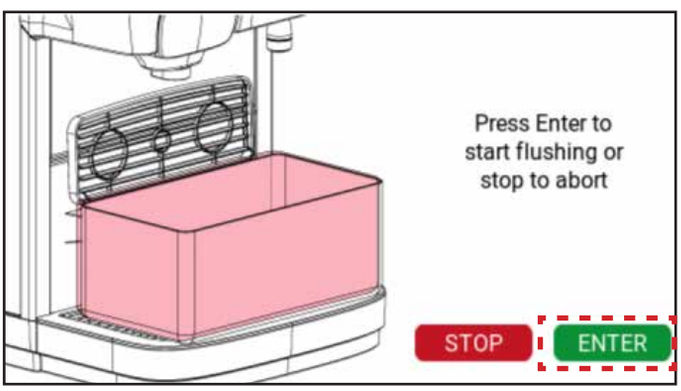

6. Press enter to start flushing.

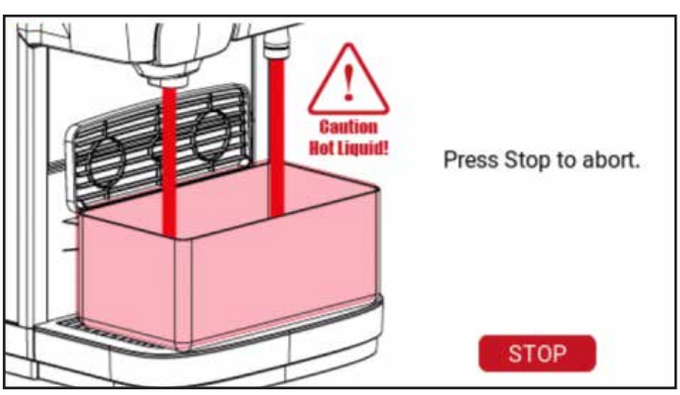

7. Wait until flushing has been completed.
   To abort, press "STOP" button.

NOTE:
You can flush the dispenser at any time.

9.5 Cleaning - Q100 & Q300

1. Press (A) and then press (B) to enter the MAINTENANCE mode.

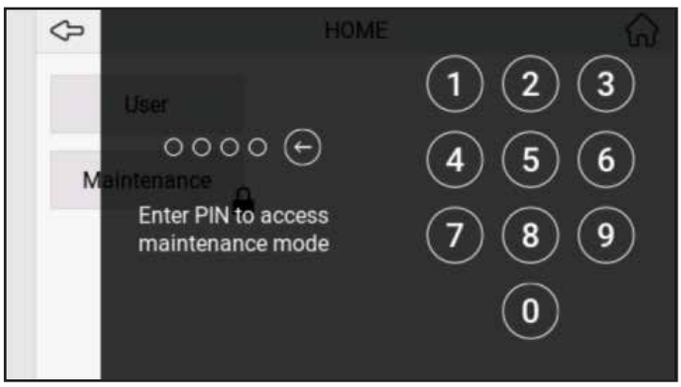

2. Enter PIN to access maintenance mode.

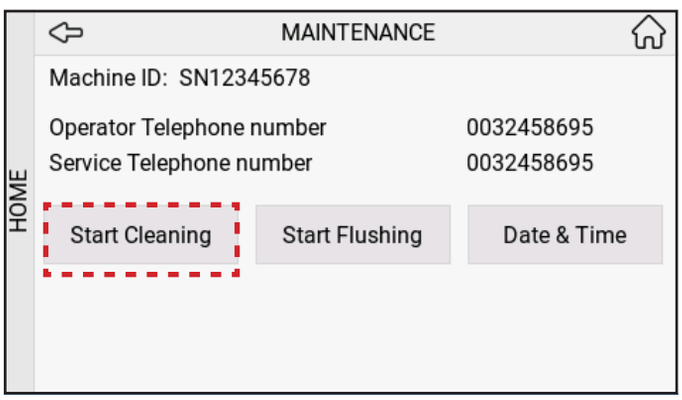

3. Press "Start Cleaning".

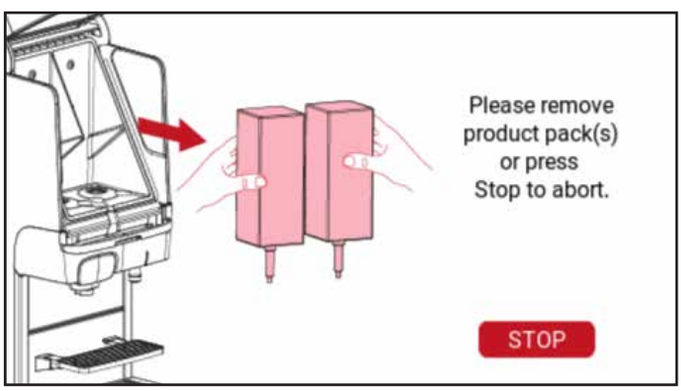

4. Remove product packs.

5. Clean coolbox and press "Enter".

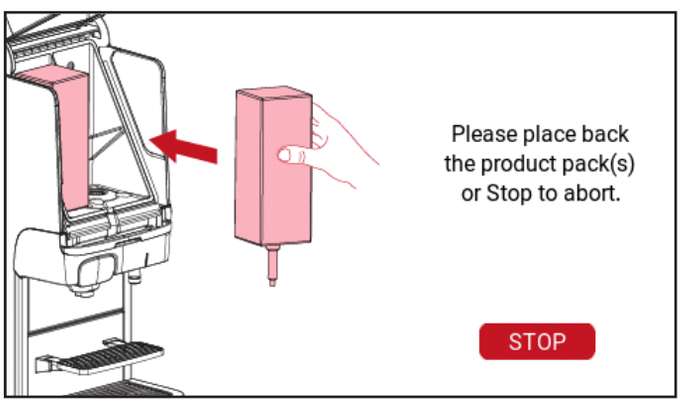

6. Place back the product pack(s).

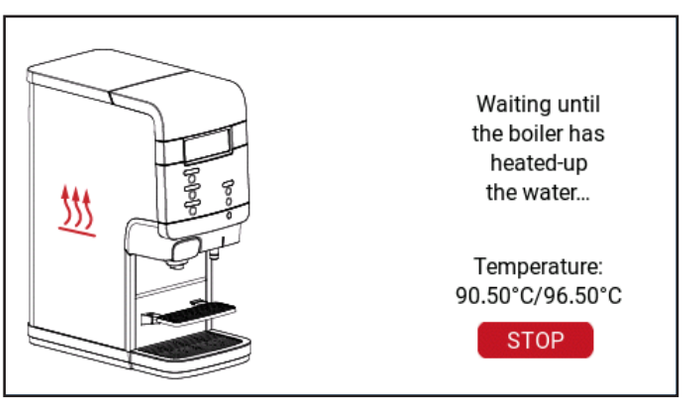

7. Wait until the boiler heats the water.

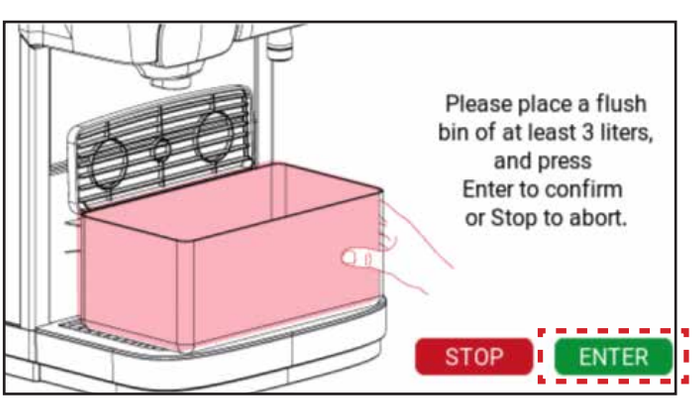

8. Place a flush bin and press "Enter".

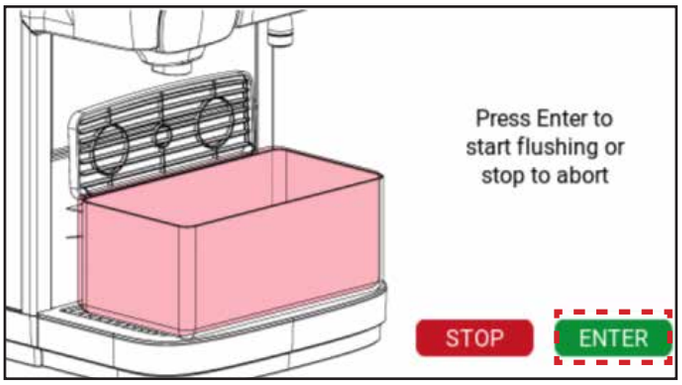

9. Press enter to start flushing.

10. Wait until flushing is completed.

11. Remove and clean the driptray.

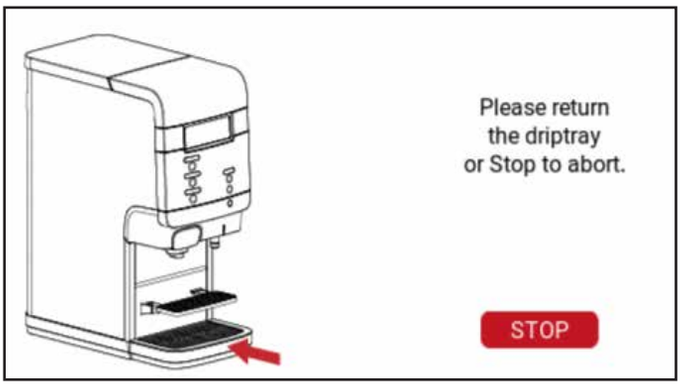

12. After cleaning the driptray, please return it.

9.6 Cleaning - Q200

1. Press (A) and then press (B) to enter the MAINTENANCE mode.

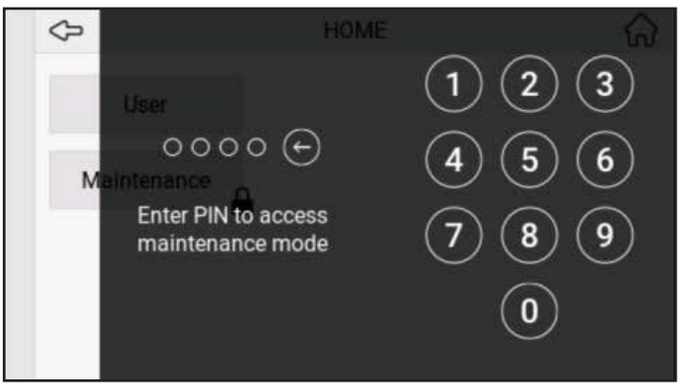

2. Enter PIN to access maintenance mode.

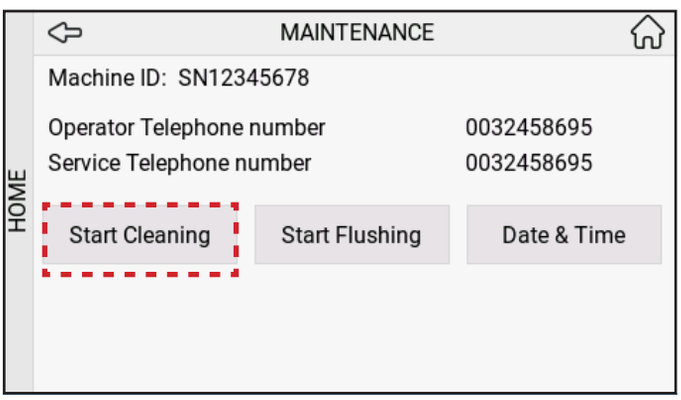

3. Press "Start Cleaning".

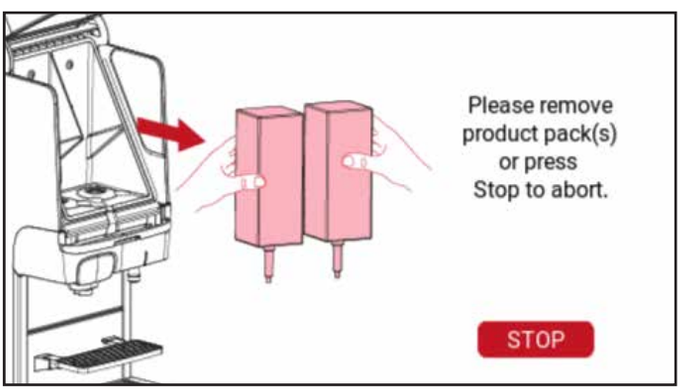

4. Remove product packs.

5. Clean coolbox and press "Enter".

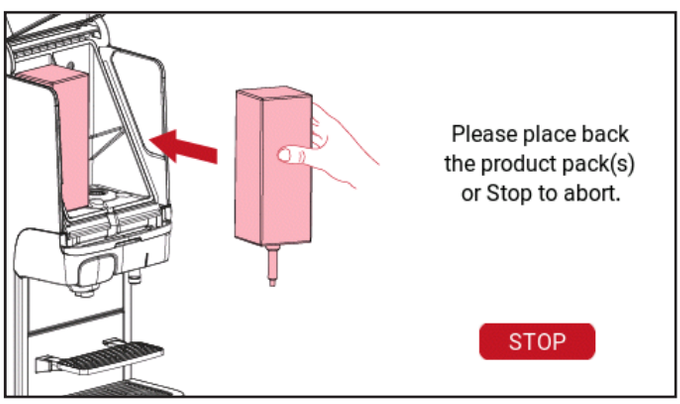

6. Place back the product pack(s).

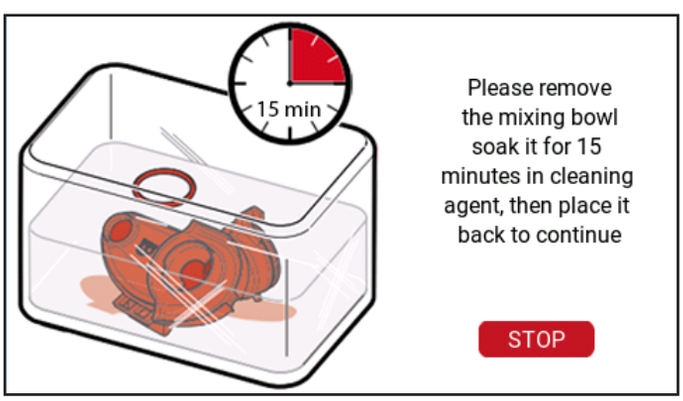

7. Replace the mixing bowl.
Soak it for 15 minuts in a cleaning agent.

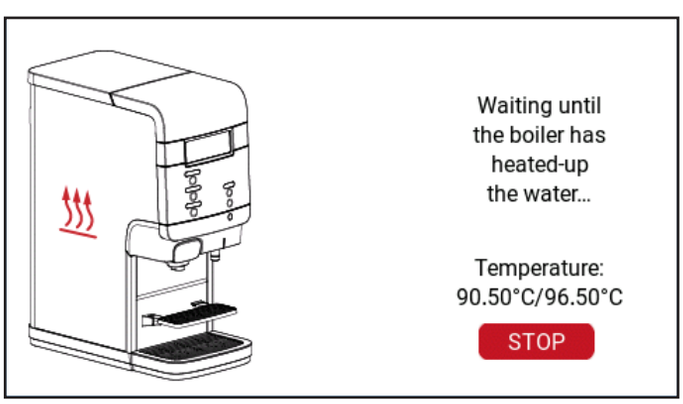

8. Wait until the boiler heats the water.

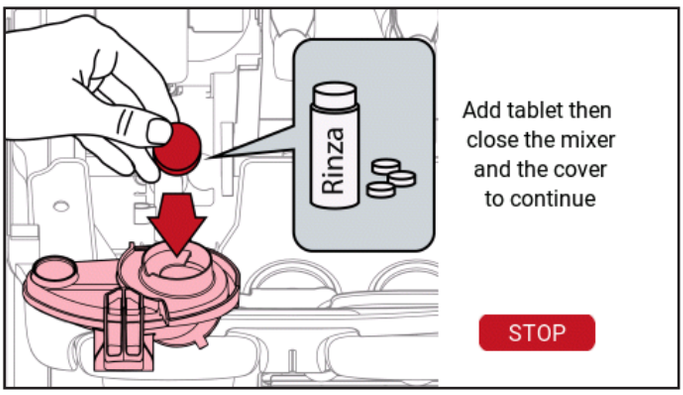

9. Insert a tablet into the mixer.
Close the mixer and the cover.

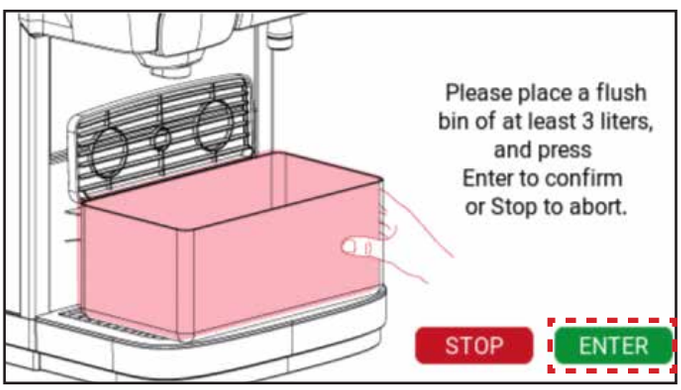

10. Place a flush bin and press "Enter".

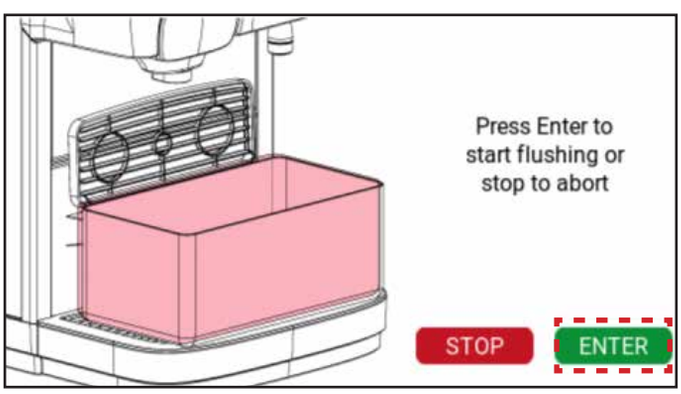

11. Press enter to start flushing.

12. Wait until flushing is completed.

13. Remove and clean the driptray.

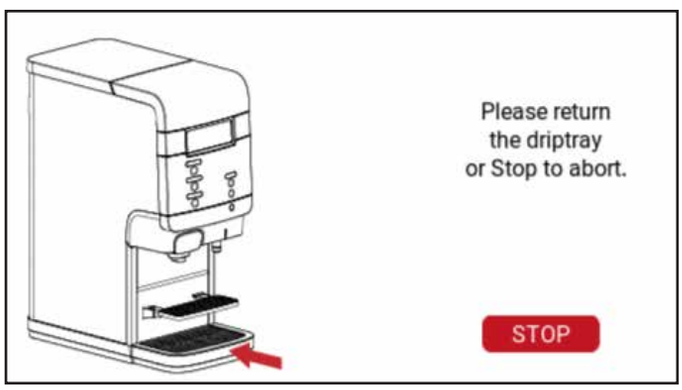

14. After cleaning the driptray, please return it.

10- USER PROGRAMMING

10.1 Activating the operator mode

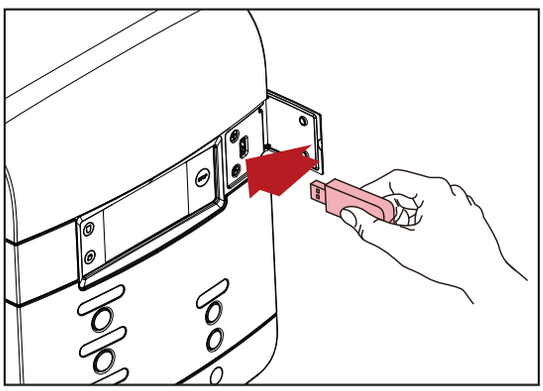

Remove the cover and insert the supplied operator USB key.

This immediately starts the operator mode.

Please note that some menu items might be disabled by the service technician. Contact your Cafitesse systems supplier if you need your settings altered.

The following menus are available:

- UI settings - adjust brightness and screen display
- Date / time - set date and time
- Language - set language
- Eco settings - set eco timers
- Summer / winter time - set automatic summer/winter time adjustment
- Happy hour - set free of charge periods
- Payment - set drink prices and payment mode
- Non-resettable counters - read counters
- Cleaning schedule - set cleaning day
- Resettable counters - read and reset counters
- Water system - set water filter
- System Info. - read the information of the system
- Contact info - enter contact details
- Maintenance Pin - Cleaning and flushing
- Global drink settings - adjust drink volume and strength

NOTE:
Dispenser programming is not available in all markets. Some menus may be disabled depending on dispenser configuration.

10.2 UI settings

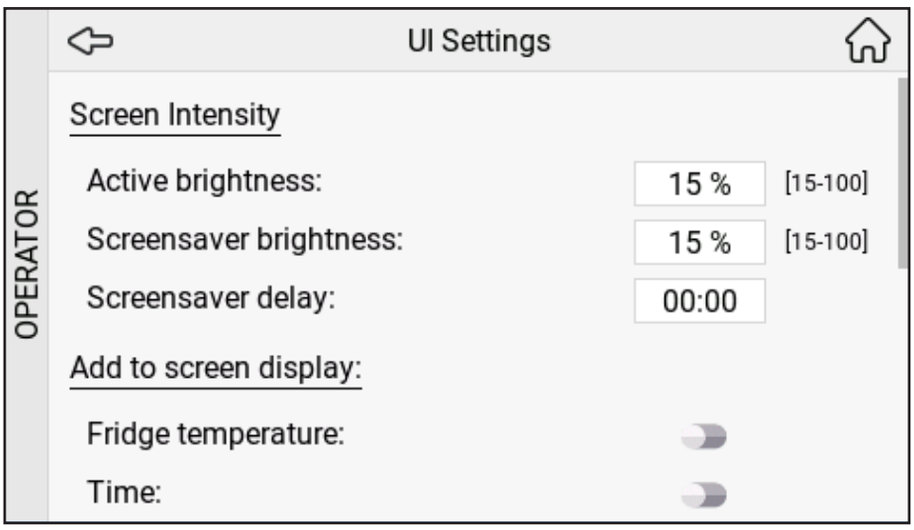

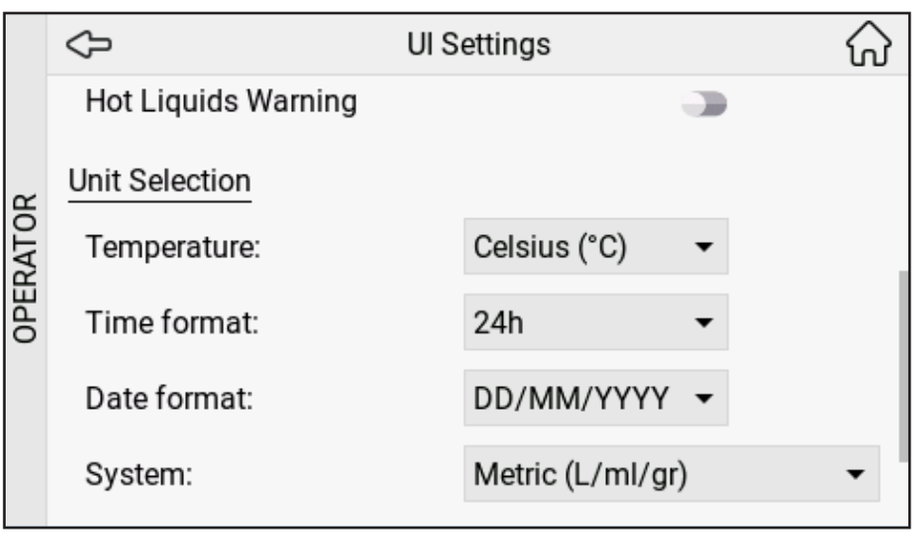

In the UI Settings menu you can adjust Screen Intensity and set the screen display. You can set the Unit format of the screen display.

10.3 Date / time

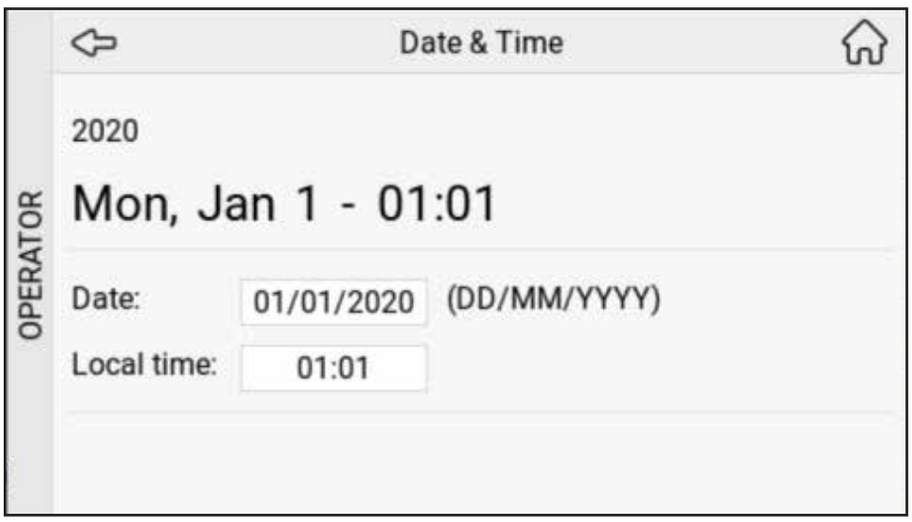

In the Date / Time menu you can adjust the date and time.

10.4 Language

In the language menu you can select the languages from which the user can choose, including the order of appearance as well as the default language.

10.5 Eco settings

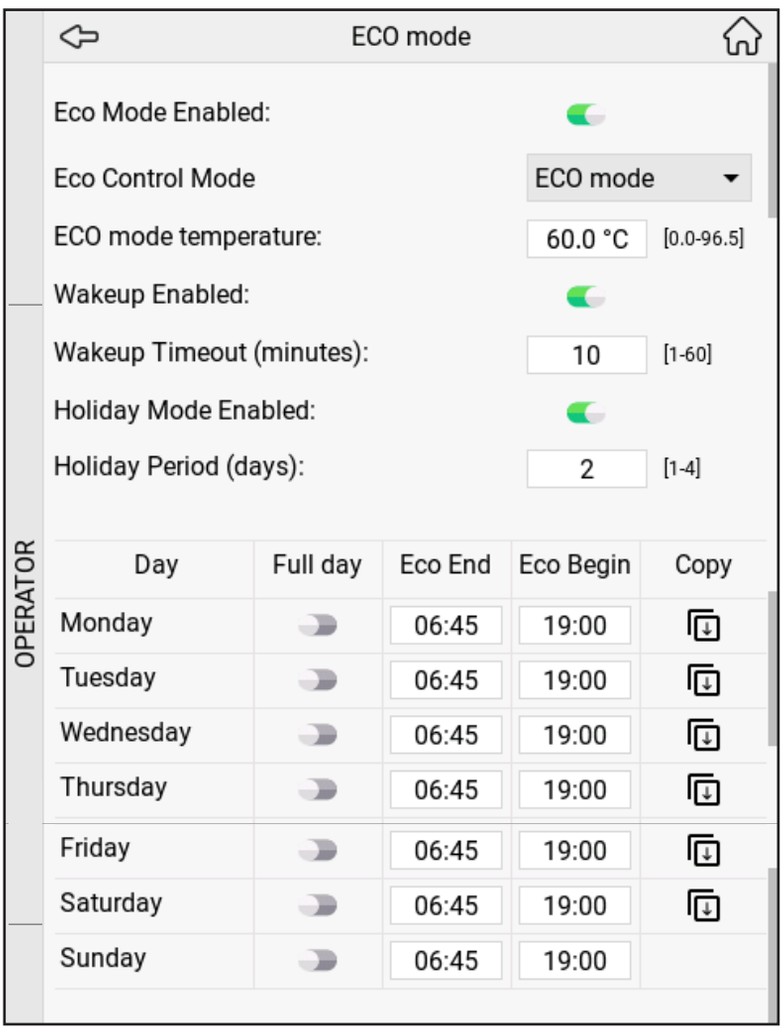

In the ECO Settings menu you can enable or disable the ECO mode, set the automatic wakeup (allows a user to interupt ECO mode when necessary to make a drink) and set ECO mode hours for each day of the week.

10.6 Summer / winter time

In the Summer / Winter Time menu you can set automatic summer/winter time adjustment.

10.7 Happy hour

In the Happy Hour Setting menu you can set up to four free vending times during all days when drinks can be dispensed without payment, or enable and disable Happy Hour if preferred.

10.8 Payment

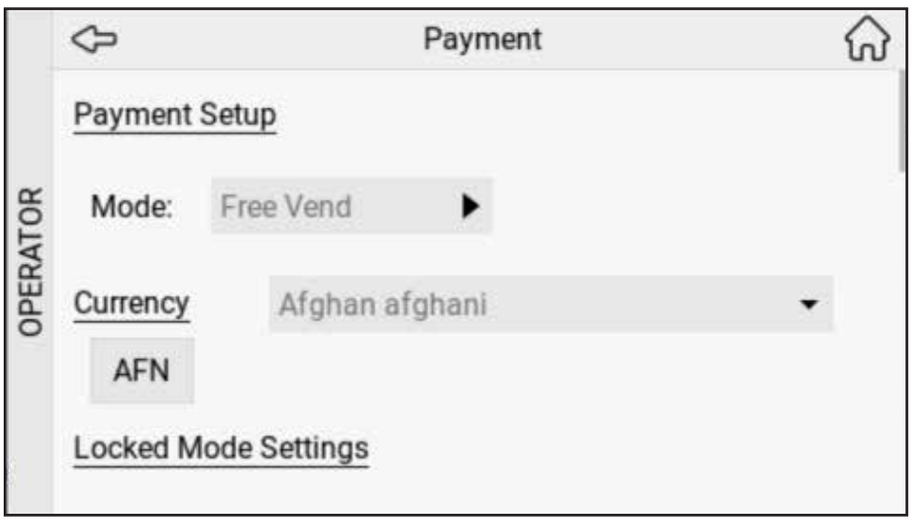

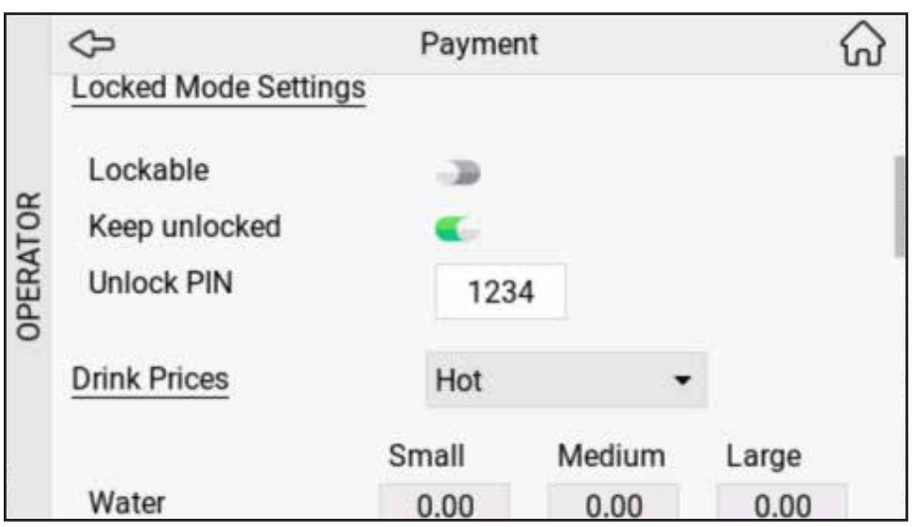

In the Payment menu you can select the payment mode, select the currency and set drink prices.

10.9 Non-resettable counters

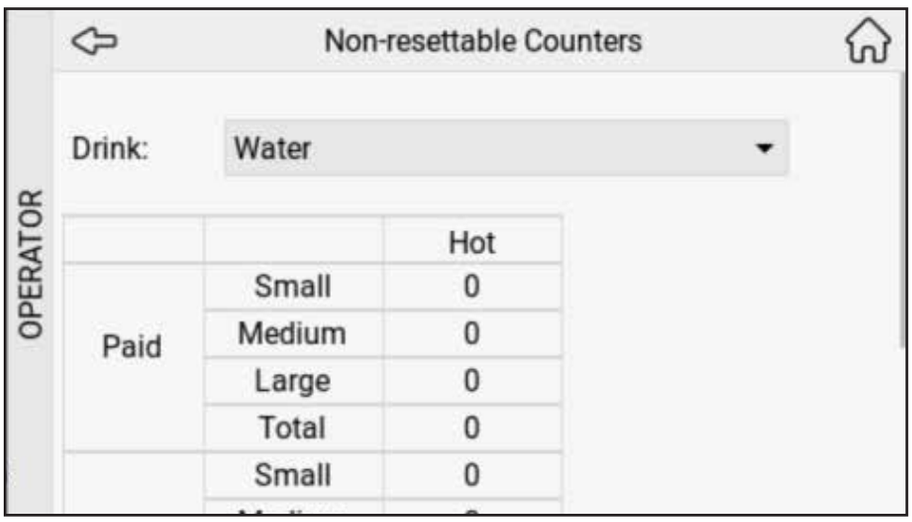

In the Non-resettable Counters menu you can read the drinks dispensed by selecting each drink separately.

10.10 Cleaning schedule

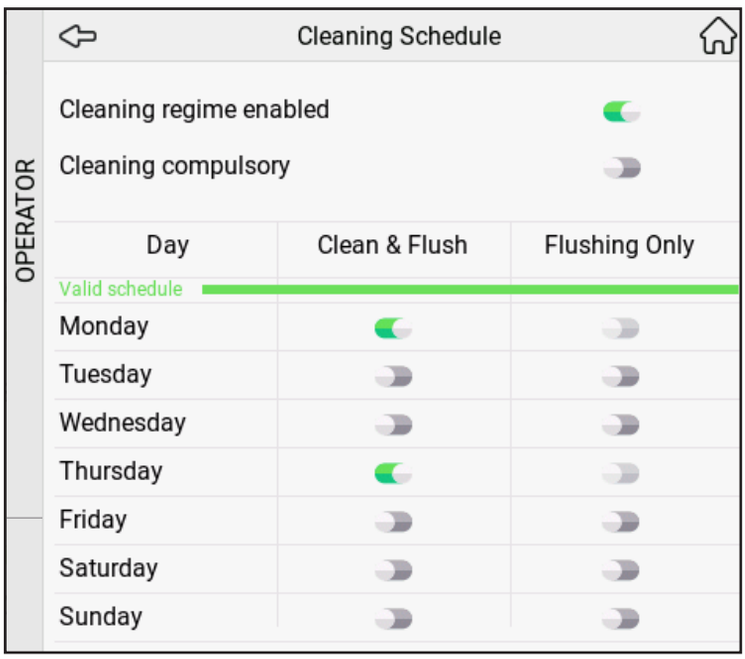

In the Cleaning Day menu you can adjust the day(s) that the dispenser will automatically request to be cleaned by selecting Yes for automatic request on that day, or No to prevent cleaning request on that day.

NOTE:
You can set more cleaning days the minimum required number of days, if needed.

10.11 Resettable counters

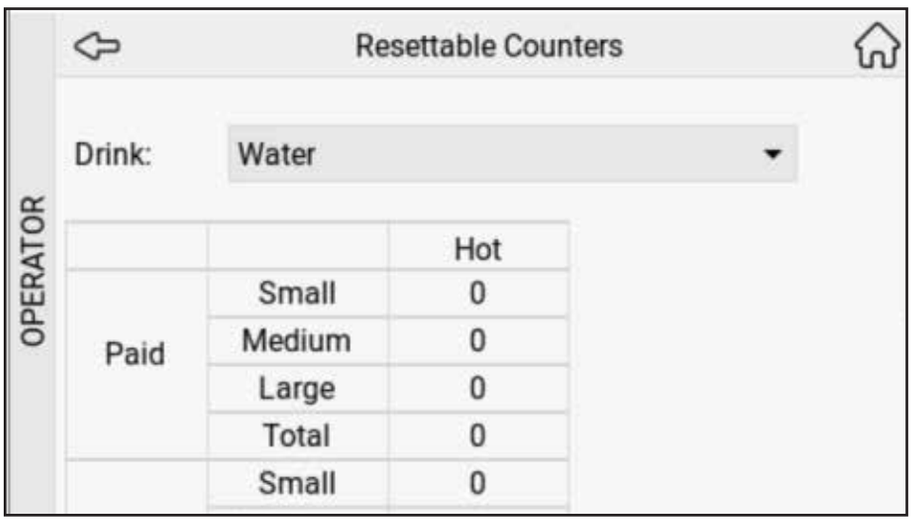

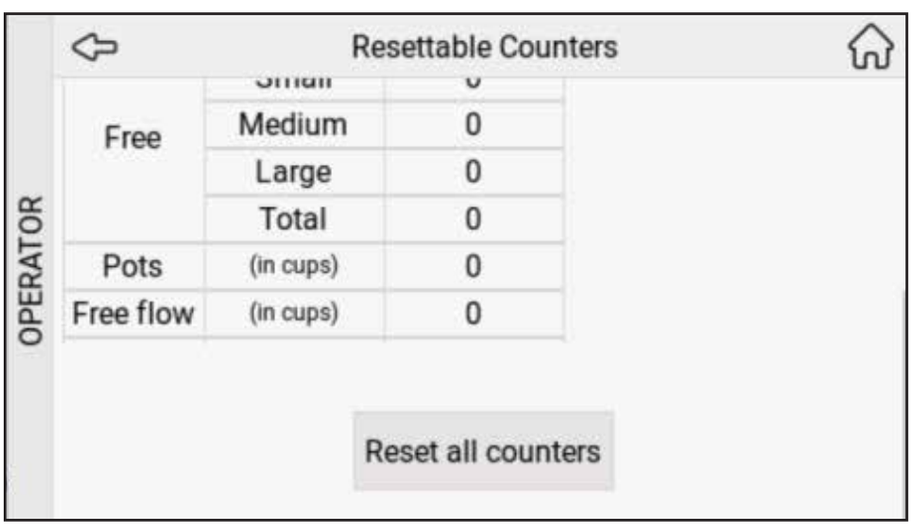

In the Resettable Counters menu you can view the drinks dispensed since the last reset by selecting each drink separately, or reset all drink counters at one time by pressing All.

10.12 Water system

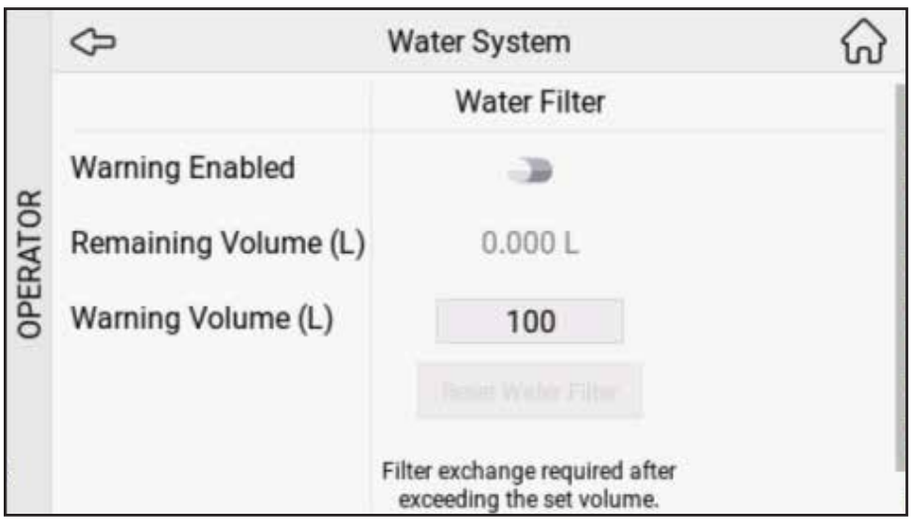

In the Water System menu you can enable or disable the warning and check remaining volume for water filter.

10.13 System Info

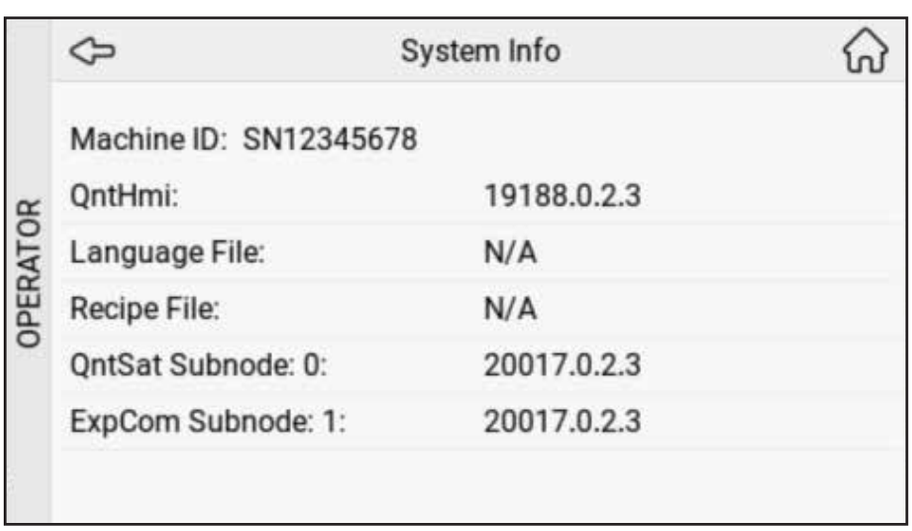

In the System Info menu you can get the information "Machine ID", "QntHmi", "Language File", "Recipe File", "QntSat Subnode" and "ExpCom Subnode".

10.14 Contact info

In the Contact Info menu you can set the operator and service phone numbers.

10.15 Maintenance Pin

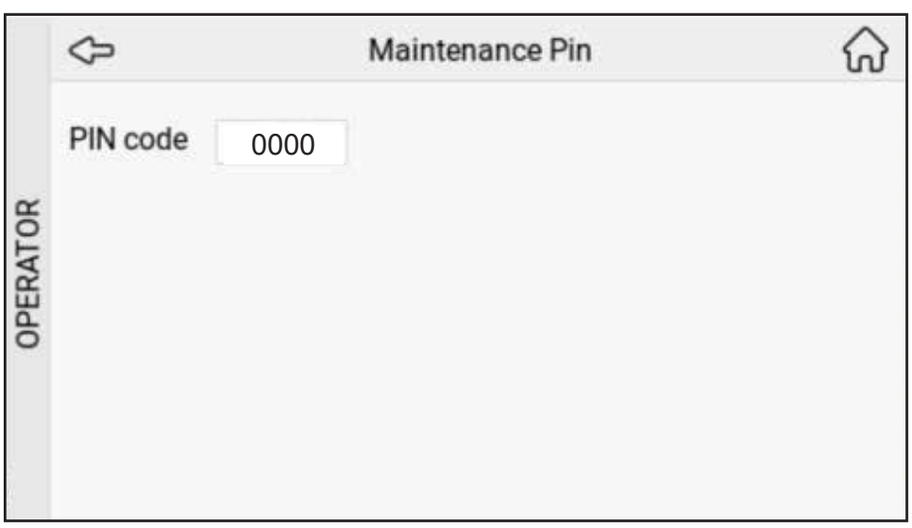

In the Maintenance Pin menu you can set the pin.

10.16 Global drink settings

In the Global Drinks Settings menu by pulling the slider left or right you can adjust the Global Strength and Global Volume. You can view the new strength percentage (XX%).

11- DISPLAY MESSAGE AND TROUBLE SHOOTING

Symbol	Display Message	Cause	Action
	Refill right pack	Empty ingredient pack (right hand side)	Replace the right ingredient pack
	Refill left pack	Empty ingredient pack (left hand side)	Replace the left ingredient pack
	Refill both packs	The product packs are: 1. Empty 2. Incorrectly positioned 3. Not present	Replace the empty product packs. Check whether the product pack is inserted correctly. Insert a product pack. Call the operator when the number is shown on the display.
	-	Cleaning due. The dispenser must be cleaned.	Run the “Cleaning” program within 24 hours. Call the operator if the phone number is shown on the display.
	Cleaning required	Cleaning overdue. The drink delivery is blocked because the dispenser was not cleaned as scheduled.	Run the “Cleaning” program immediately. Call the operator if the phone number is shown on the display.

12- OPTIONS

The features and options listed in this section may not apply in each country. Please consult your Cafitesse system supplier for more information.

12.1 Software options

On customer demand the service technician can enable or disable

specific functions of your dispenser.

For example:

- Alternative settings for drink recipes, varieties, strength or cup volume.
- Enable/disable preset selections such as drink strength (mild, normal, strong) or cup size (small, medium, large.
- Portioned or continuous delivery.
- Custom energy saving settings.
- Custom cleaning settings according to your preference.

Welbilt (Hangzhou) Appliance Technology Co., Ltd.
No. 800 Binkang Road, Binjiang District, Hangzhou, Zhejiang, China

www.crem.coffee